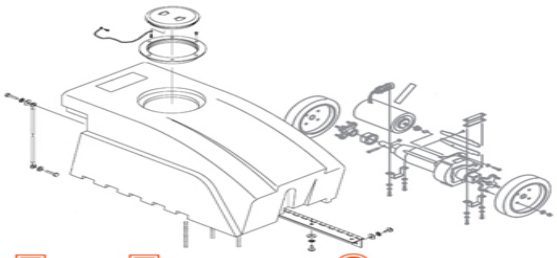

FLOOREQUIPMENTPARTS.COM

TENNANT

5400

Scrubber

Operator and Parts Manual

Model No.:

606931 - Disk Standard, 610mm (24 in)
606932 - Disk ES™, 610mm (24 in)
607525 - Disk Wand Prep, 610mm (24 in)
606933 - Disk Deluxe, 610mm (24 in)
606934 - Cylindrical Standard, 610mm (24 in)
606935 - Cylindrical ES™, 610mm (24 in)
607526 - Cylindrical Wand Prep, 610mm (24 in)
606936 - Cylindrical Deluxe, 610mm (24 in)
610877 - Disk Standard, 660mm (26 in)
610878 - Disk ES™, 660mm (26 in)
610879 - Disk Wand Prep, 660mm (26 in)
610880 - Disk Deluxe, 660mm (26 in)

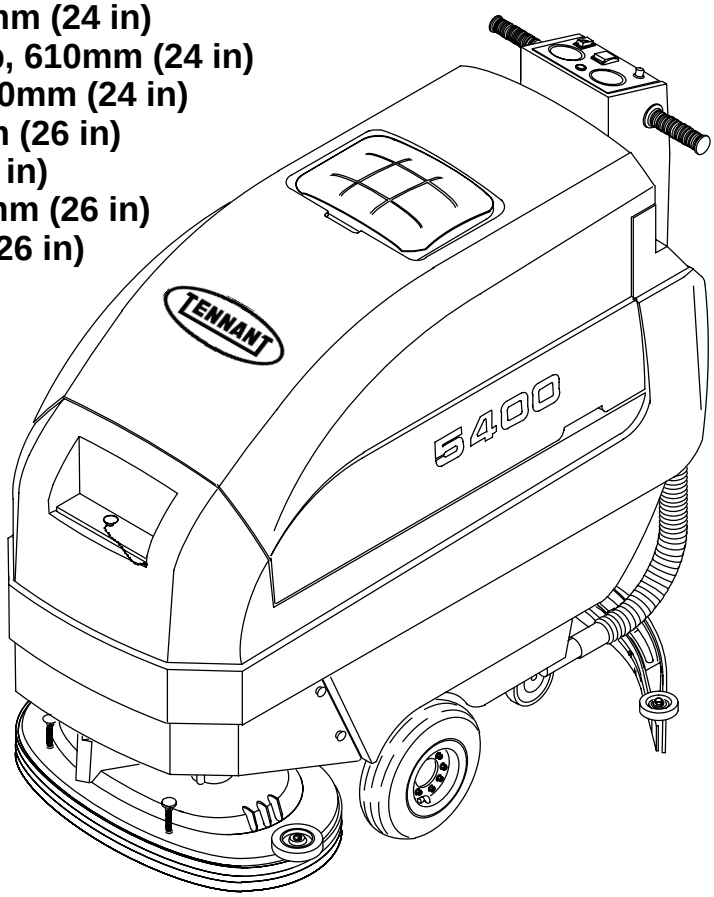

606862
Rev. 04 (03–02)

LADDER DIAGRAM

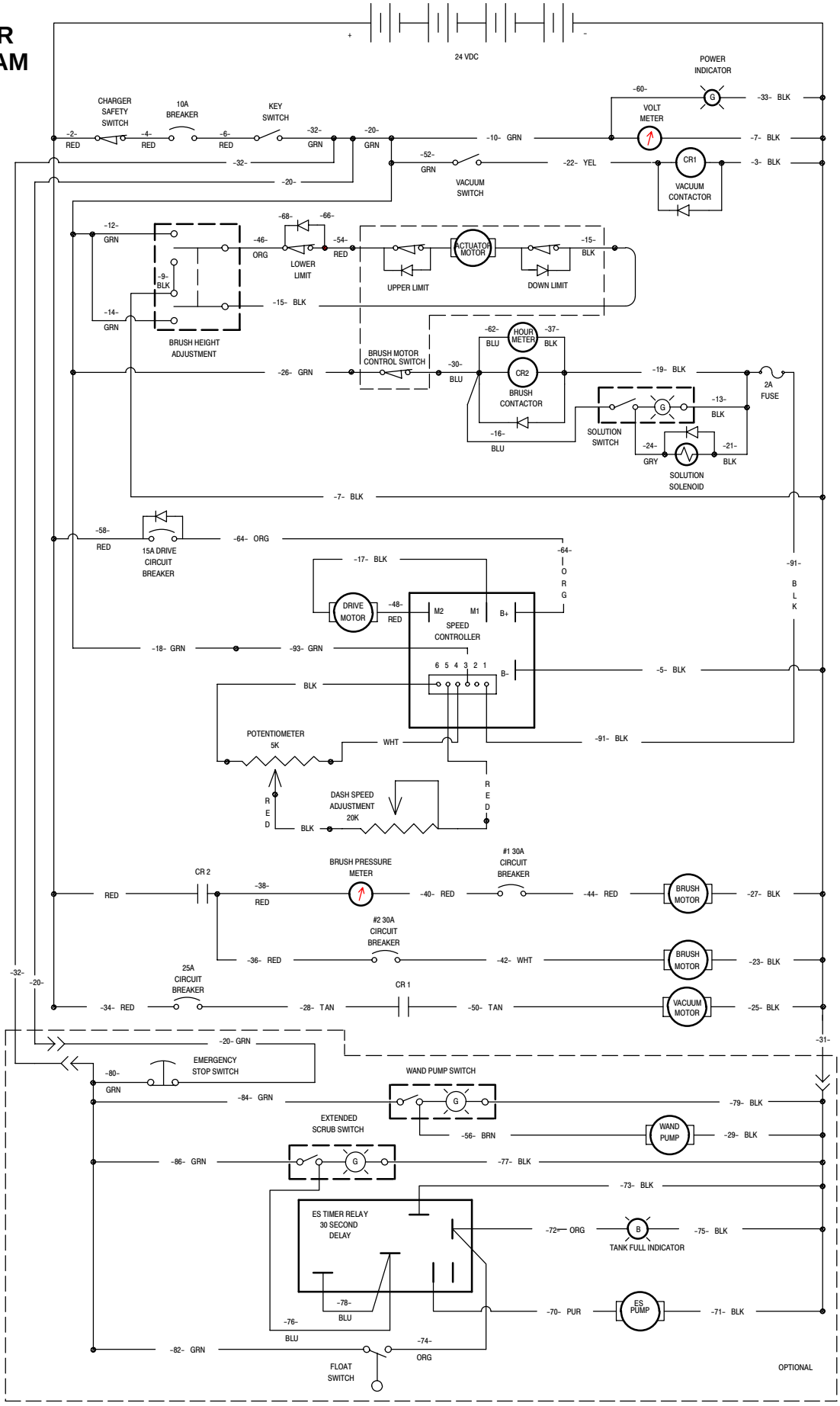

WIRE DIAGRAM

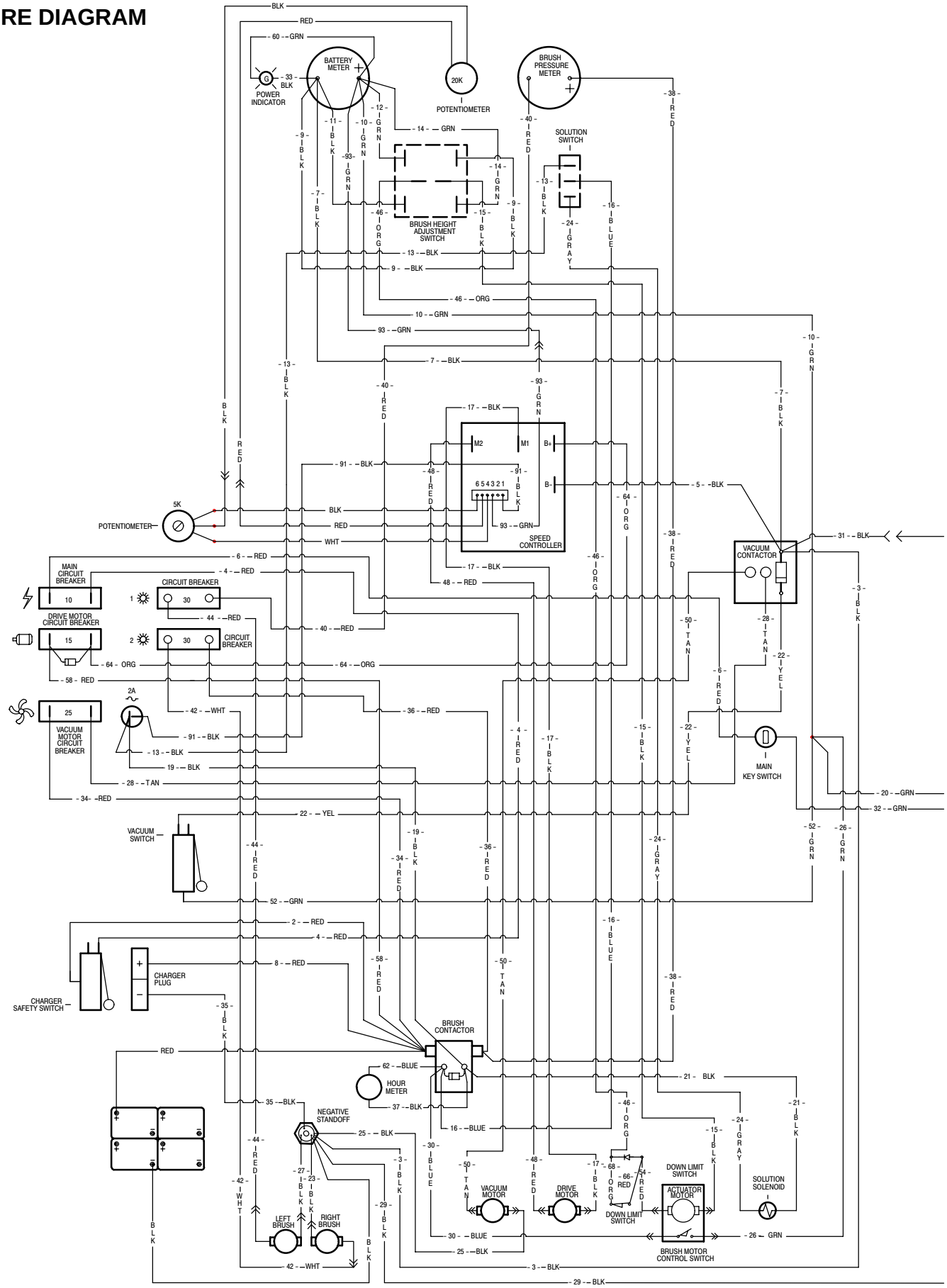

WIRE DIAGRAM (OPTIONS)

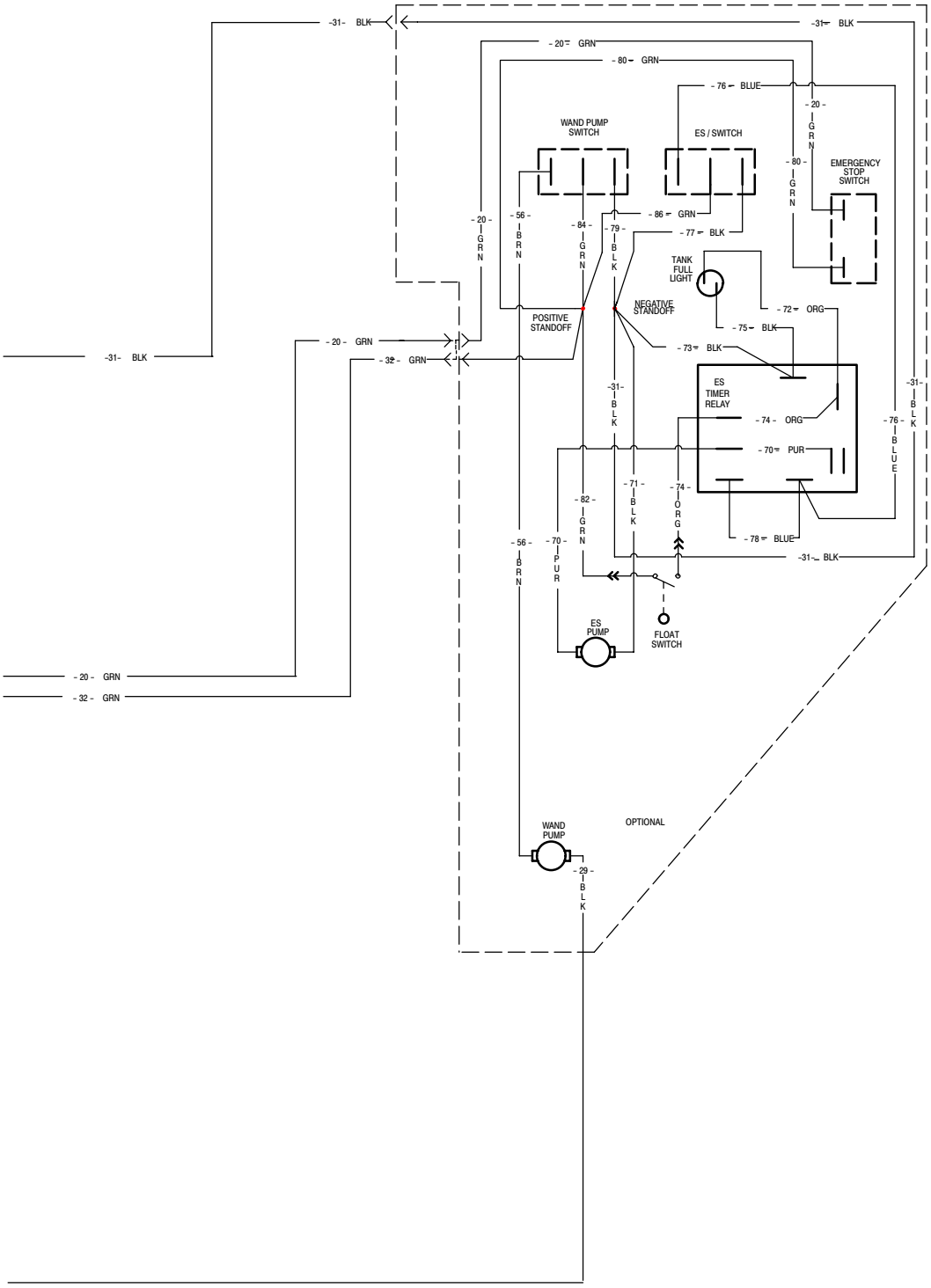

REPLACEMENT BRUSH AND PAD DRIVER GROUP

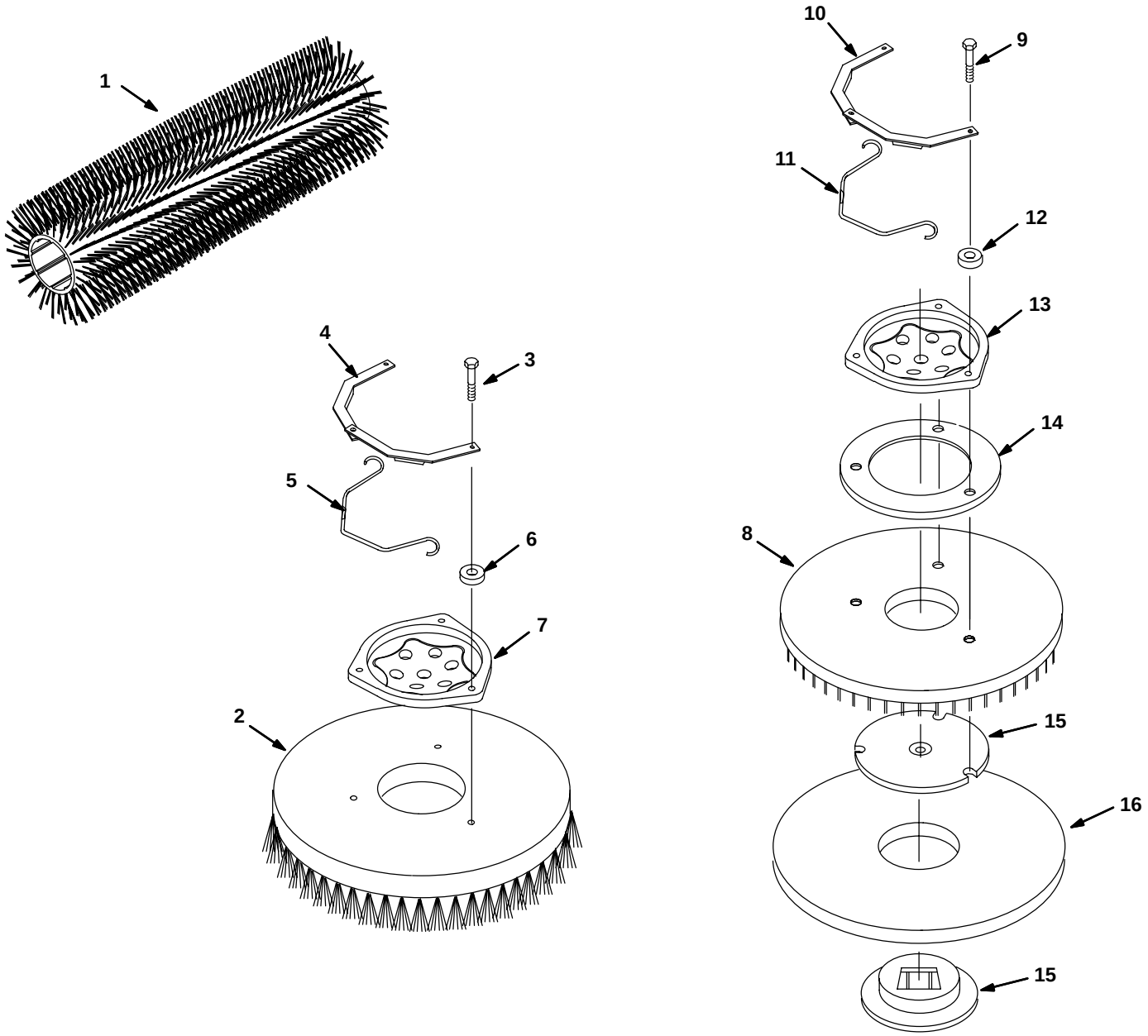

REPLACEMENT BRUSH AND PAD DRIVER GROUP

REF	PART #	DESCRIPTION	QTY.
1	385910	●BRUSH, CYLINDRICAL, SOFT NYLON, 610MM (24 IN)	2
	385911	●BRUSH, CYLINDRICAL, POLY, 610MM (24 IN)	2
	385912	●BRUSH, CYLINDRICAL, HEAVY DUTY POLY, 610MM (24 IN)	2
	385913	●BRUSH, CYLINDRICAL, ABRASIVE GRIT, 610MM (24 IN)	2
∇ 2	385906	●BRUSH, DISK, POLY, 305MM (12 IN)	2
	385905	●BRUSH, DISK, SOFT NYLON, 305MM (12 IN)	2
	385907	●BRUSH, DISK, ABRASIVE GRIT, 305MM (12 IN)	2
	385923	●BRUSH, DISK, POLY, 330MM (13 IN)	2
	385925	●BRUSH, DISK, SOFT NYLON, 330MM (13 IN)	2
	385924	●BRUSH, DISK, ABRASIVE GRIT, 330MM (13 IN)	2
▲ 3		SCREW, M6X1.0X40 HXHDCP	3
▲ 4	626074	●CLIP, RETAINER, BRUSH HUB	2
▲ 5	626072	●SPRING, BRUSH HUB	1
▲ 6	626080	SPACER, 8.1X17.5X4.8	2
▲ 7	626133	●ADAPTER, BRUSH	1

∇ ASSEMBLY

▲ INCLUDED IN ASSEMBLY

● RECOMMENDED STOCK ITEMS

REF	PART #	DESCRIPTION	QTY.
∇ 8	385944	●ASSEMBLY, PAD DRIVER, 305MM (12 IN)	2
	385946	●ASSEMBLY, PAD DRIVER, 330MM (13 IN)	2
▲ 9	630431	SCREW, M6X1.0X40 HXHDCP	3
▲ 10	626074	●CLIP, RETAINER BRUSH HUB	2
▲ 11	626072	●SPRING, BRUSH HUB	1
▲ 12	626080	SPACER, 8.1X17.5X4.8	2
▲ 13	626133	●ADAPTER, BRUSH	1
▲ 14	11218	SPACER	1
▲ 15	370095	●CENTERLOCK	1
16	385943	●PAD, STRIPPER, BROWN, 305MM (12 IN)	1
	385942	●PAD, SCRUBBER, BLUE, 305MM (12 IN)	1
	385941	●PAD, BUFFING, RED, 305MM (12 IN)	1
	385940	●PAD, POLISHING, WHITE, 305MM (12 IN)	1
	89046	●PAD, STRIPPER, BROWN, 330MM (13 IN)	1
	89047	●PAD, SCRUBBER, BLUE, 330MM (13 IN)	1
	89048	●PAD, BUFFING, RED, 330MM (13 IN)	1
	89049	●PAD, POLISHING, WHITE, 330MM (13 IN)	1

SOLUTION TANK GROUP

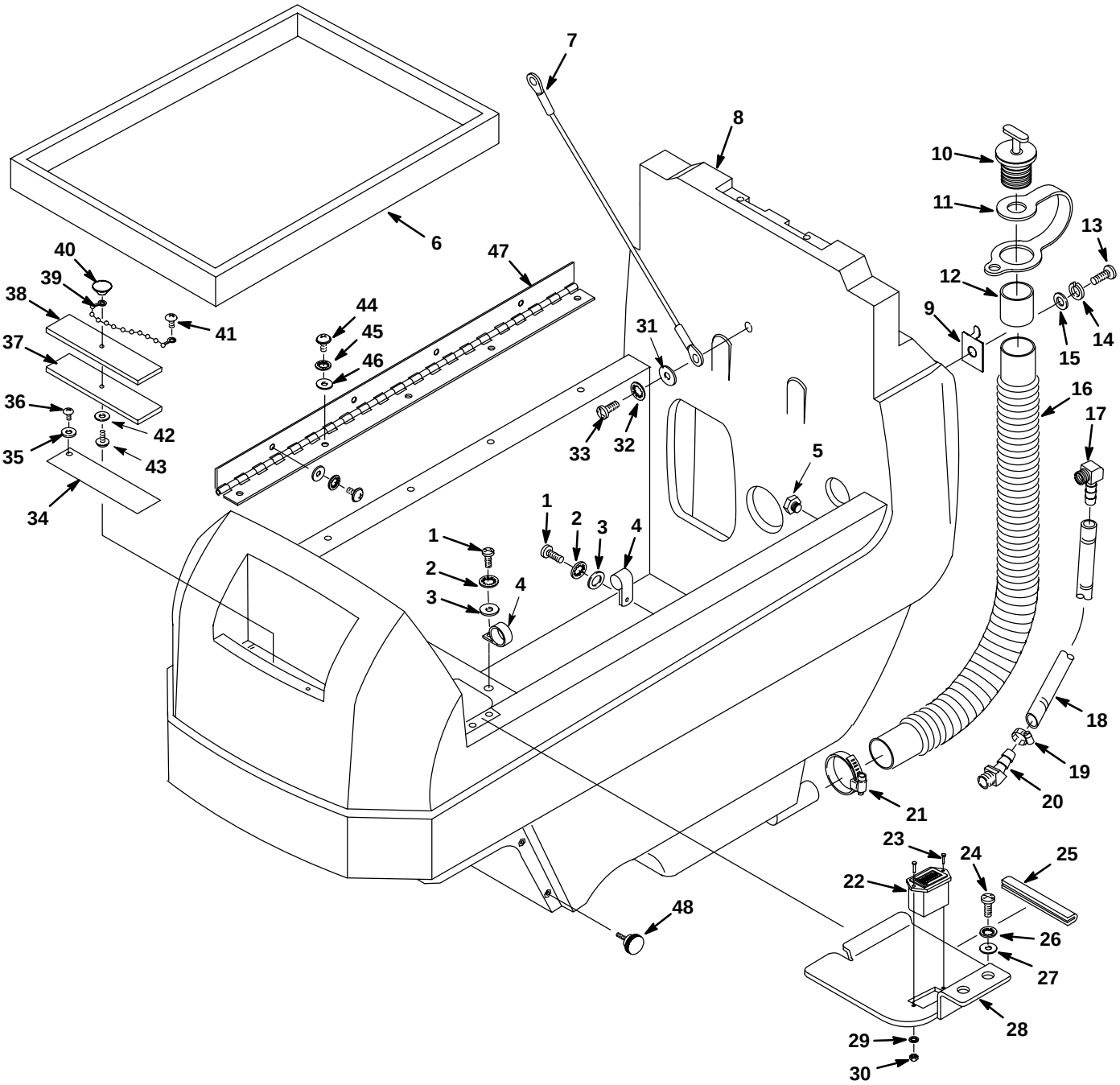

SOLUTION TANK GROUP

REF	PART #	DESCRIPTION	QTY.
1	608322	SCREW, M6X1.0X16 TRSPHL	3
2	578244000	WASHER, M6.4 LOCK	3
3	140000	WASHER, 1/4 FLAT	3
4	606697	CLAMP 1.125 DIA	3
5	630146	PLUG, 3/8”	1
6	605059	TRAY, BATTERY	1
7	140960	●CABLE, REC TANK SUPPORT	1
8	611344	TANK, SOLUTION – TEAL	1
9	601460	CLIP, DRAIN HOSE	1
10	621324	●PLUG, EXPANSION 1–1/2”DIA	1
11	578441	●STRAP, DRAIN HOSE	1
12	630394	●SLEEVE, DRAIN HOSE 1.5”	1
13	608322	SCREW, M6X1.0X16 TRSPHL	1
14	578244000	WASHER, M6.4 LOCK	1
15	140000	WASHER, 1/4 FLAT	1
16	605042	●HOSE DRAIN, 1.50 DIA X 27	1
17	150419	FITTING, 1/4MX3/8H ELBOW	1
18	606879	HOSE, SIGHT GAGE	1
19	140305	CLAMP, HOSE 7/32–5/8	1
20	605394	FITTING, BRS, E45, BM06/PM04 T	1
21	140307	CLAMP, HOSE 3/4 TO 1–3/4	1
22	31988	HOUR METER, 18–60VDC	1
23	200070266	SCREW, M3X.5X16 PANPHL	2
24	608322	SCREW, M6X1.0X16 TRSPHL	2

REF	PART #	DESCRIPTION	QTY.
25	606889	EDGING, PLASTIC 1/8 X 3.6”	1
26	578244000	WASHER, M6.4 LOCK	2
27	140000	WASHER, 1/4 FLAT	2
28	606524	BRACKET, HOUR METER	1
29	200301012	WASHER, M3 FLAT	2
30	579211	NUT, M3	2
31	140000	WASHER, 1/4 FLAT	1
32	578244000	WASHER, M6.4 LOCK	1
33	608322	SCREW, M6X1.0X16 TRSPHL	1
34	606146	●SCREEN, SOLUTION FILL	1
35	140032	WASHER, #6 FLAT	2
36	140826	SCREW, #6X3/4 PANPHL	2
37	605062	●GASKET, SOLUTION FILL COVER	1
38	605061	●COVER, SOLUTON FILL	1
39	621443	●CHAIN, DRAIN PLUG	1
40	578301	●KNOB, FILL COVER	1
41	140826	●SCREW, #6X3/4 PANPHL	1
42	140018	WASHER, #10 LOCK	1
43	578201000	SCREW, #10–32X.5 PANPHL	1
44	608322	SCREW, M6X1.0X16 TRSPHL	9
45	578244000	WASHER, M6.4 LOCK	9
46	140000	WASHER, 1/4 FLAT	9
47	605244	HINGE, RECOVERY TANK	1
48	603012	●KNOB, FRONT SHROUD	5

● RECOMMENDED STOCK ITEMS

RECOVERY TANK GROUP

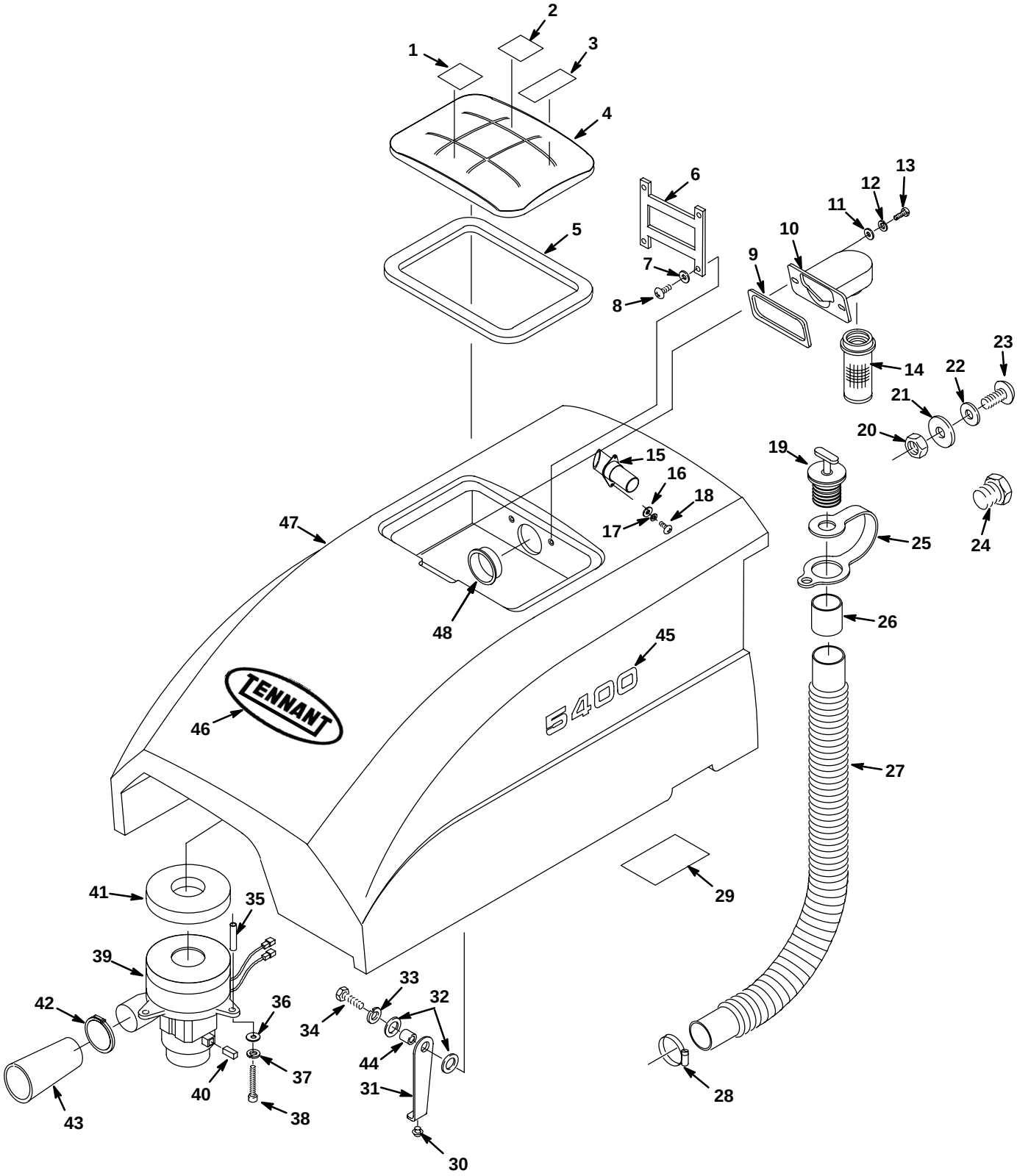

RECOVERY TANK GROUP

REF	PART #	DESCRIPTION	QTY.
1	630422	DECAL, BATTERY CHARGE	1
2	606105	DECAL, DO NOT SPRAY	1
3	630420	DECAL, FLAMMABLE MATERIAL	1
4	630055	COVER, TANK CLEANOUT	1
5	630367	●GASKET, REC. TANK COVER	1
6	630056	STRAP, TANK COVER RETAINING	1
7	630390	WASHER, .15 FLAT	4
8	140872	SCREW, #6X3/8 PANPHL	4
9	630255	GASKET, FLOAT MOUNT	1
10	630053	MOUNT, FLOAT CAGE	1
11	140000	WASHER, 1/4 FLAT	2
12	578244000	WASHER, M6.4 LOCK	2
13	600385	SCREW, M6X1.0X20 PANPHL	2
14	630052	●FLOAT CAGE, W/BALL	1
15	607372	ADAPTER, HOSE	1
16	200301016	WASHER, M5.3 FLAT	2
17	200655016	WASHER, M5 LOCK	2
18	200070382	SCREW, M5X.8X10	2
19	621324	●PLUG, EXPANSION 1–1/2”DI	1
20	603418	NUT, 5/8–11 HEX NYLON	1
21	605147	WASHER, .65 RUBBER	1
22	605385	WASHER, .69 FLAT	1
23	609709	SCREW 5/8–11X1”	1
24	630147	PLUG, 3/4”	1
25	578441	●STRAP, DRAIN HOSE	1

REF	PART #	DESCRIPTION	QTY.
26	630394	●SLEEVE, DRAIN HOSE 1.5”ID	1
27	605042	●HOSE, DRAIN 1.50 DIA X 27	1
28	140307	CLAMP, HOSE	1
29	606520	DECAL, BATTERY PLACEMENT	1
30	069760189	●BUMPER, RUBBER	1
31	606527	●SUPPORT, RECOVERY TANK	1
32	140027	WASHER, 5/16 FLAT	2
33	140015	WASHER, 5/16 LOCK	1
34	200031486	SCREW, M8X1.25X16 HXHDCP	1
35	626041	SPACER	3
36	140000	WASHER, 1/4 FLAT	3
37	140016	WASHER, 1/4 LOCK	3
38	626123	SCREW, M6X100 HXHDCP	3
∇ 39	605057	●MOTOR, VACUUM 5.7 3STG 24VDC	1
▲ 40	190163	BRUSH, CARBON, 2/PK	1
41	626092	●GASKET, VACUUM FAN	1
42	130041	WIRE TIE, NYLON	1
43	600009	●MUFFLER, VAC EXHAUST	1
44	611418	SLEEVE, P/M, .437D .315B .14L	1
45	606401	DECAL, 5400	2
46	630229	DECAL, TENNANT	1
47	606587	TANK, RECOVERY – TEAL	1
48	610979	PLUG, CAP 2”	1

∇ ASSEMBLY

▲ INCLUDED IN ASSEMBLY

● RECOMMENDED STOCK ITEMS

CONSOLE GROUP

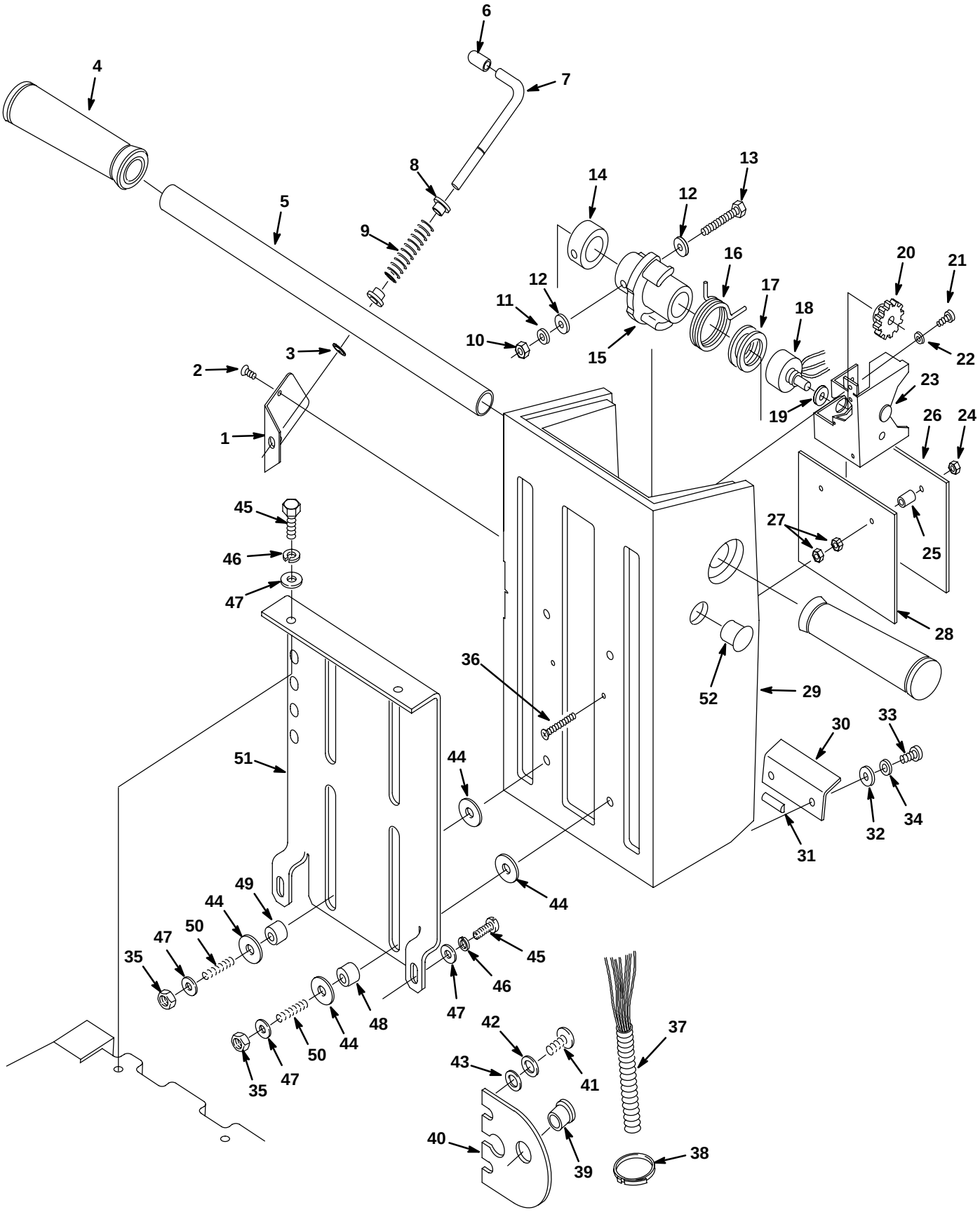

CONSOLE GROUP

REF	PART #	DESCRIPTION	QTY.
1	630087	PLATE, LATCH RETAINER	1
2	630114	SCREW, M4X.7X8 FLTPHL	2
3	630084	RING, RETAINING EXT.	1
4	222648	●GRIP, HANDLE TUBE	2
5	630093	HANDLEBAR	1
6	630094	GRIP, CONSOLE ADJUST LEVER	1
7	630081	LEVER, CONSOLE ADJUST.	1
8	630083	BUSHING, LATCH	2
9	630082	SPRING	1
10	579029	NUT, M6X1.0	1
11	578244000	WASHER, M6.4 LOCK	1
12	579210	WASHER, 6.4X18.0X1.5 FLAT	2
13	630431	SCREW, M6X1.0X40 HXHDCP	1
14	630217	COLLAR	1
15	630109	●ASSEMBLY, HUB/GEAR	1
16	630088	●SPRING, CENTER	1
17	069760582	WASHER, NYLON	2
18	609982	●POTENTIOMETER & WIRING ASM	1
19	32485	WASHER, .38 FLAT	1
1026373 20	~~630099~~	●GEAR	1
21	200070340	SCREW, M4X.7X8 PANPHL	2
22	140023	WASHER, #8 LOCK	2
23	630079	BRACKET, LIMIT SWITCH MOUNT	1
24	02850	NUT, M4 HXLCK	2
25	610943	SPACER, .217ID, .315OD, .375L	2
26	630104	BOARD, SPEED CONTROL	1
27	02850	NUT, M4 HXLCK	4

● RECOMMENDED STOCK ITEMS

REF	PART #	DESCRIPTION	QTY.
28	630128	HEATSINK, 11GA. ALUM.	1
29	610924	CONSOLE – TEAL	1
30	630086	PLATE, STRAIN RELIEF	1
31	606888	SKID STRIP, .75” LONG	1
32	140000	WASHER, 1/4 FLAT	2
33	608322	SCREW, M6X1.0X16 TRSPHL	2
34	578244000	WASHER, M6.4 LOCK	2
35	08709	NUT, M8 HXLCK	4
36	630304	SCREW, M4X.7X35 FLTPHL	2
37	606726	HARNESS, MAIN WIRE	1
38	130042	WIRE TIE, NYLON	2
39	130104	BUSHING, SNAP .875 ID	1
40	605067	RETAINER, WIRE HARNESS	1
41	608322	SCREW, M6X1.0X16 TRSPHL	2
42	578244000	WASHER, M6.4 LOCK	2
43	140000	WASHER, 1/4 FLAT	2
44	608562	WASHER, .506 FLAT, NYLON	8
45	578237000	SCREW, M8X1.25X18 HXHDCP	4
46	200370019	WASHER, M8.4 LOCK	4
47	32491	WASHER, 5/16 FLAT	8
48	607783	BEARING, .314ID, .503OD	2
49	630259	BEARING, 9.5ID, 12.7OD	2
50	607461	SCREW, SET, M8X1.25X35	4
51	608563	PLATE, CONSOLE SLIDE	1
52	130280	PLUG, DOME	1

CONSOLE PANEL GROUP

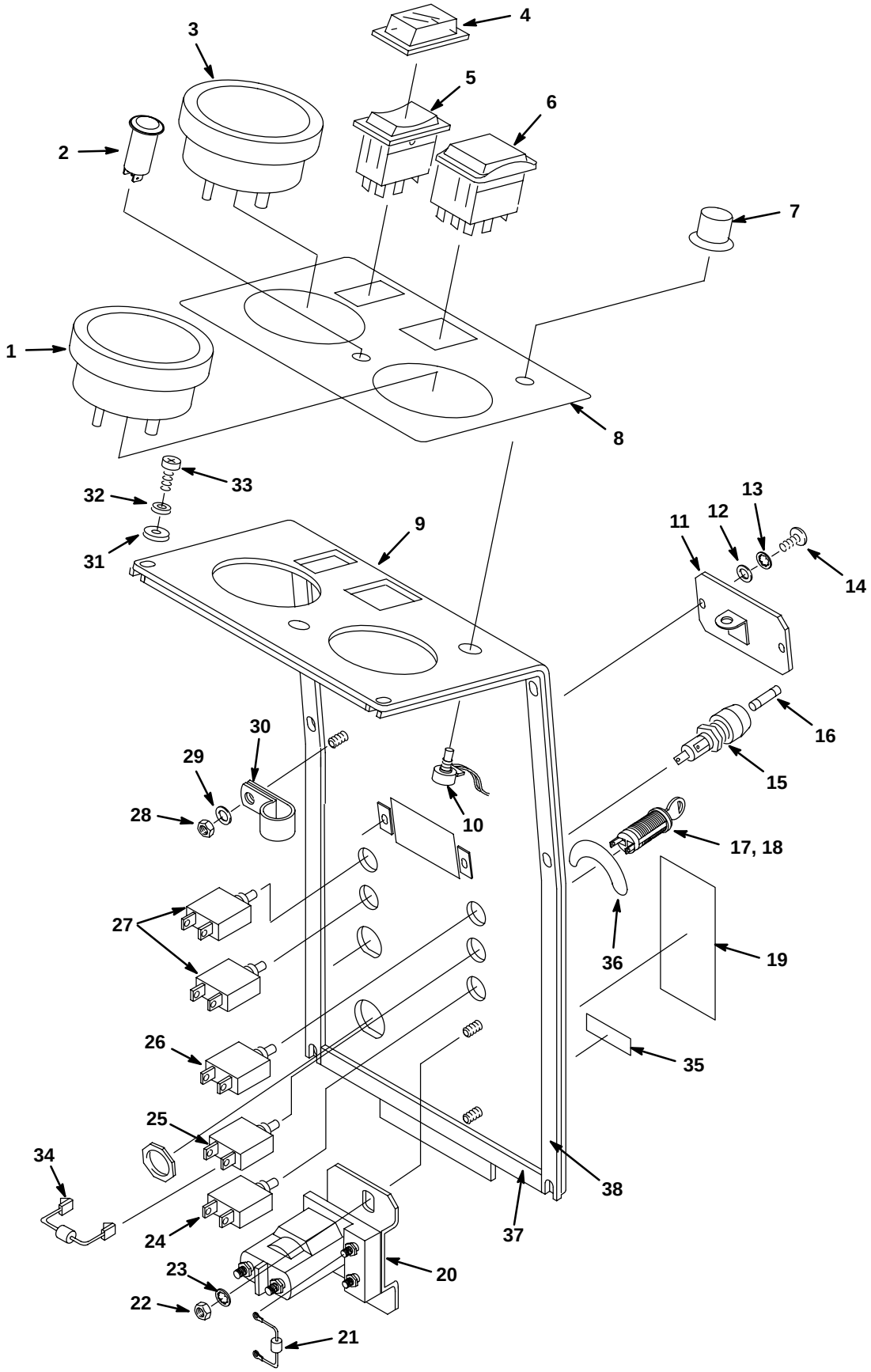

CONSOLE PANEL GROUP

REF	PART #	DESCRIPTION	QTY.
1	630091	●METER, BATTERY	1
2	130738	●LIGHT, INDICATOR GREEN	1
3	606990	●GAUGE, BRUSH PRESSURE	1
4	578720	●SPLASHGUARD, RCKR SWITCH	1
5	630419	●SWITCH, SOLUTION	1
6	222116	●SWITCH, BRUSH PRESSURE	1
7	630265	●KNOB, SPEED LIMIT	1
8	606518	DECAL, DASH	1
9	605044	PANEL, SWITCH	1
10	630133	●RESISTOR, 0–20K, SPEED CONTROL	1
11	605045	PLATE, SWITCH COVER	1
12	575541000	WASHER, M5.3 FLAT	2
13	200655016	WASHER, M5 LOCK	2
14	578141000	SCREW, M5X10 PANPHL	2
15	578418	●FUSEHOLDER, BAYONETTE	1
16	601091	●FUSE, 2AMP	1
17	130785	●SWITCH, KEY	1
18	607821	●KEY, REPLACEMENT	1
19	606519	DECAL, CIRCUIT BREAKERS	1

REF	PART #	DESCRIPTION	QTY.
20	603008	●CONTACTOR	1
21	606404	●ASM, DIODE W/RING TERMINALS	1
22	08708	NUT, M6 HXLCK	2
23	6306.4	WASHER, 1/4 FLAT	2
24	612485	●BREAKER, CIRCUIT 25 AMP	1
25	603487	●BREAKER, CIRCUIT 15 AMP	1
26	130737	●BREAKER, CIRCUIT BRUSH 10 AMP	1
27	606780	●BREAKER, CIRCUIT 30 AMP	2
28	09739	NUT, M5X.8 NYLCK	1
29	575541000	WASHER, M5.3 FLAT	1
30	140323	CLAMP, NYLON 1/2”	1
31	200301014	WASHER, M4.3 FLAT	8
32	140023	WASHER, #8 LOCK	8
33	200070340	SCREW, M4X.7X8 PANPHL	8
34	607394	DIODE	1
35	–	DECAL, PAT. PEND.	1
36	604793	DECAL, KEYSWITCH ON(1)/OFF(0)	1
37	630453	GASKET, 143MM	2
38	630119	GASKET	2

● RECOMMENDED STOCK ITEMS

DRIVE GROUP

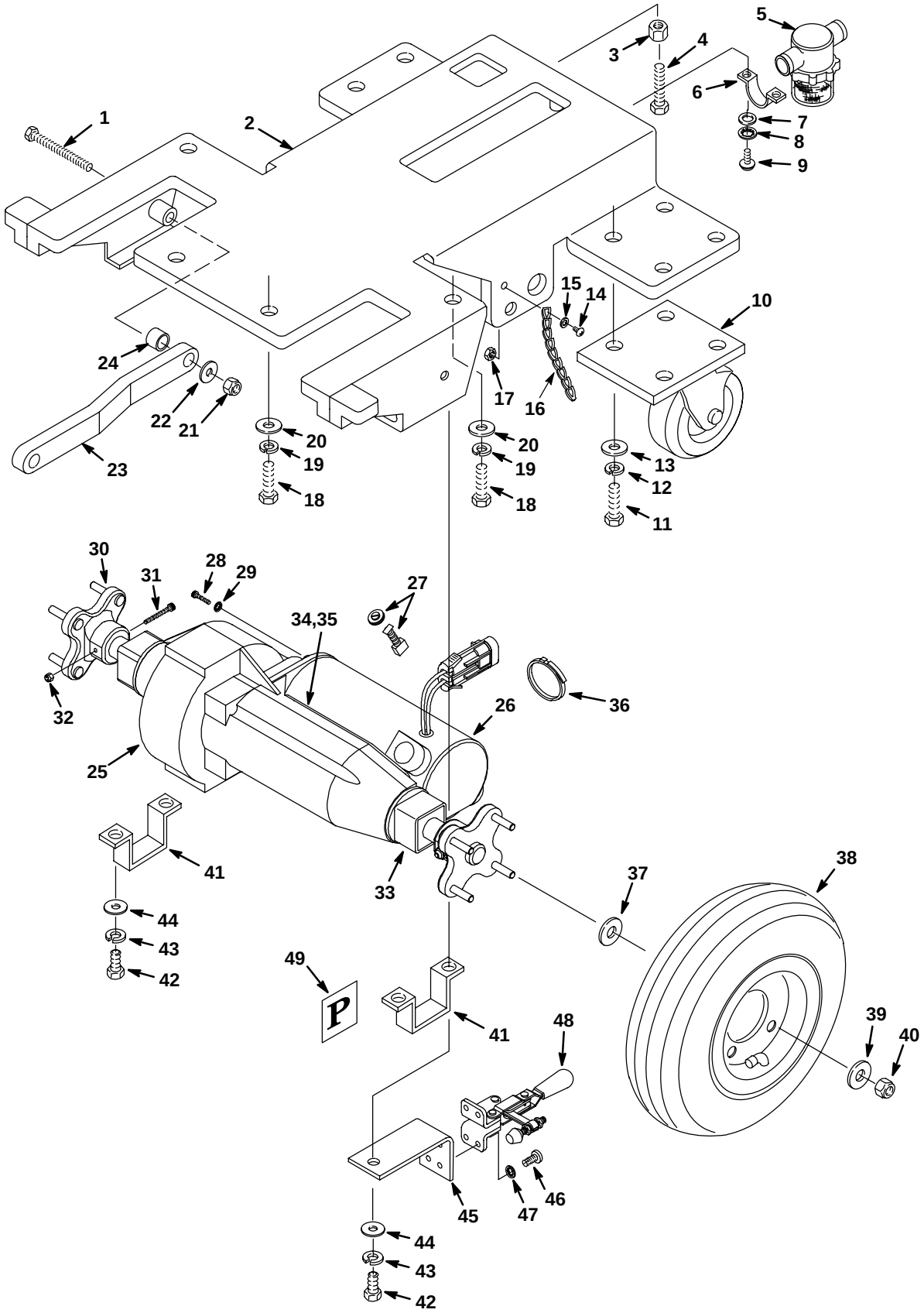
1
2
3
4
5
6
7
8
9
10
11
12
13
14
15
16
17
18
19
20
21
22
23
24
25
26
27
28
29
30
31
32
33
34,35
36
37
38
39
40
41
42
43
44
45
46
47
48
49
P

DRIVE GROUP

REF	PART #	DESCRIPTION	QTY.
1	575544000	SCREW, M8X1.25X80 HXHDCP	2
2	606014	FRAME, TRANSAXLE	1
3	07786	NUT, M8 HEX	1
4	575544000	SCREW, M8X1.25X80 HXHDCP	1
5	601475	●SCREEN, FILTER	1
6	605056	BRACKET, FILTER MOUNT	2
7	140011	WASHER, 3/16 FLAT	4
8	200655016	WASHER, M5 LOCK	4
9	578141000	SCREW, M5X10 PANPHL	4
630002 10	~~612056~~	●CASTER, 4”DIA	2
11	09010	SCREW, M8X1.25X25 HXHDCP	8
12	200370019	WASHER, M8.4 LOCK	8
13	32491	WASHER, 5/16 FLAT	8
14	140287	SCREW, 10–24X3/8	2
15	200301014	WASHER, M4.3 FLAT	2
16	605950	●CHAIN, LINK 8”	2
17	02850	NUT, M4 HXLCK	2
18	200031488	SCREW M8X1.25X20 HXHDCP	4
19	200370019	WASHER, M8.4 LOCK	4
20	32491	WASHER, 5/16 FLAT	4
21	08709	NUT, M8 HXLCK	2
22	32491	WASHER, 5/16 FLAT	2
23	222027	ARM, HEAD LIFT	2
24	606056	SLEEVE, HEAD ARM	2
∇ 25	612844	TRANSAXLE, 24V MOTOR	1
▲	612873	TRANSAXLE, REPL. BODY ONLY	1
▲	612874	COUPLING, TRANSAXLE	1
▲	612875	KEY, TRANSAXLE	1

REF	PART #	DESCRIPTION	QTY.
▲∇ 26	612877	●MOTOR, TRANSAXLE	1
▲▲ 27	612883	●KIT, CARBON BRUSH (2/PK)	1
▲ 28	140868	SCREW, 1/4–20X5/8 SHCS	2
▲ 29	32982	WASHER, 1/4 INT. LOCK	2
▲ 30	612879	HUB, WHEEL, TRANSAXLE	2
▲ 31	31249	BOLT, #10–24 SHOULDER	2
▲ 32	140552	NUT, #10–24 NYLOCK	2
▲ 33	612880	SLEEVE, TRANSAXLE REPL.	2
▲ 34	613082	COVER, TRANSAXLE	1
▲ 35	577031000	SCREW, #8X1/2 PANPHL	2
36	130041	WIRE TIE, NYLON	2
37	140053	WASHER, 9/32X7/8X1/8	8
38	630215	●WHEEL, PNEUMATIC, AIR	2
	640013	●WHEEL, NEOPRENE, SOLID	2
	600352	●WHEEL, FOAM FILLED	2
	604357	●KIT, PNEUMATIC WHEEL, AIR	1
	606754	●KIT, NEOPRENE WHEEL, SOLID	1
	604259	●KIT, FOAM FILLED WHEEL	1
39	140000	WASHER, 1/4 FLAT	8
40	630268	NUT, 1/4–28 HEXLCK	8
41	606001	BRACKET, TRANSAXLE	2
42	200031494	SCREW, M8X1.25X30 HXHD	4
43	200370019	WASHER, M8.4 LOCK	4
44	32491	WASHER, 5/16 FLAT	4
∇	606751	KIT, PARKING BRAKE (OPTION)	1
▲ 45	606823	BRACKET, BRAKE	1
▲ 46	140887	SCREW, #10–24X3/8 PANPHL	4
▲ 47	140018	WASHER, #10 LOCK	4
▲ 48	600634	CLAMP, PARKING BRAKE	1
▲ 49	600624	DECAL, PARKING BRAKE	1

∇ ASSEMBLY

▲ INCLUDED IN ASSEMBLY

● RECOMMENDED STOCK ITEMS

SCRUB HEAD ACTUATOR GROUP

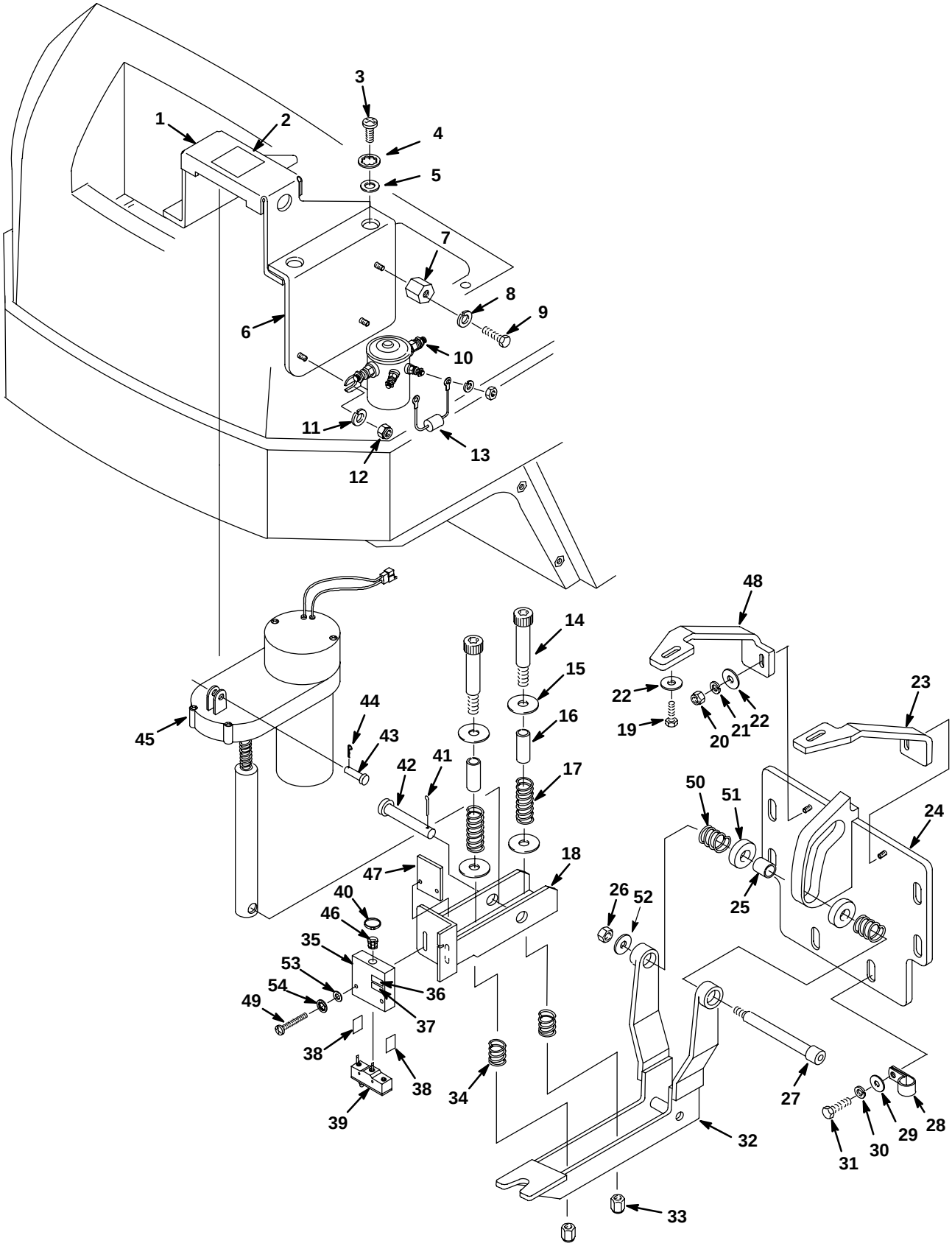

SCRUB HEAD ACTUATOR GROUP

REF	PART #	DESCRIPTION	QTY.
1	605025	BRACKET, ACTUATOR MOUNT	1
2	606521	DECAL, GENERAL HAZARD	1
3	200031488	SCREW M8X1.25X20 HXHDCP	4
4	200370019	WASHER, M8.4 LOCK	4
5	32491	WASHER, 5/16 FLAT	4
6	606523	BRACKET, CONTACTOR	1
7	578427	●STANDOFF, TERMINAL	1
8	140016	WASHER, 1/4 LOCK	1
9	069762126	SCREW, 1/4–20X5/8 HEX	1
10	605905	●SOLENOID, 24 VDC	1
11	6306.4	WASHER, 1/4 FLAT	2
12	08708	NUT, M6 HXLCK	2
13	606404	●ASM, DIODE W/RING TERMINALS	1
14	45960	●SCREW, SHLDR 3/8–16X4.25	2
15	32486	WASHER, .50 FLAT	4
16	609765	SLEEVE .50 ID X .63 OD X 1.31LG	2
17	45261	●SPRING	2
18	609698	BRACKET, SCRUBHEAD SPRING	1
19	200031488	SCREW M8X1.25X20 HXHDCP	2
20	08709	NUT, M8 HXLCK	2
21	200370019	WASHER, M8.4 LOCK	2
22	32491	WASHER, 5/16 FLAT	4
23	611050	BRACKET, ROLLER SUPPORT, LEFT	1
24	608199	BRACKET, HEADLIFT TRACK	1
25	608198	●ROLLER , LINKAGE	1
26	59156	NUT, 3/8–16 NYLCK	1
27	45960	●SCREW, SHLDR 3/8–16X4.25	1

REF	PART #	DESCRIPTION	QTY.
28	140314	CLAMP, INSULATED 3/4	1
29	32491	WASHER, 5/16 FLAT	6
30	200370019	WASHER, M8.4 LOCK	6
31	200031488	SCREW M8X1.25X20 HXHDCP	6
32	608197	BRACKET, SCRUBHEAD ROLLER	1
33	59156	NUT, 3/8–16 NYLCK	2
34	63185	●SPRING, 2.0LGX.84ODX.098WIRE	2
∇ 35	610211	BOX, SWITCH	1
▲ 36	609702	DECAL, SWITCH CYL. HEAD	1
▲ 37	609701	DECAL, SWITCH DISK HEAD	1
▲ 38	609697	DECAL, BARRIER SWITCH	2
39	606668	●SWITCH, MOMENT	1
40	130041	WIRE TIE, NYLON	1
41	578421	PIN, COTTER, .12” X 1.00”	1
42	630448	PIN, CLEVIS, .50DIA X 2.25	1
43	578202000	●PIN, CLEVIS .38DIA X 1.50	1
44	140626	●PIN, HITCH	1
45	606091	●ACTUATOR, 24VDC	1
46	607115	BUSHING, STRAIN RELIEF	1
47	607114	PLATE, BRACKET	1
48	611049	BRACKET, ROLLER SUPPORT, RIGHT	1
49	607398	SCREW, #6–32X1.25	2
50	607920	●SPRING, .72OD X1.00 LG	2
51	607568	●WASHER,THRUST, 1-1/2 OD	2
52	140046	WASHER, 1.00 X .392	1
53	140032	WASHER, #6 FLAT	2
54	140042	WASHER, #6 LOCK	2

∇ ASSEMBLY

▲ INCLUDED IN ASSEMBLY

● RECOMMENDED STOCK ITEMS

DISK SCRUB HEAD GROUP, 610mm (24 in)

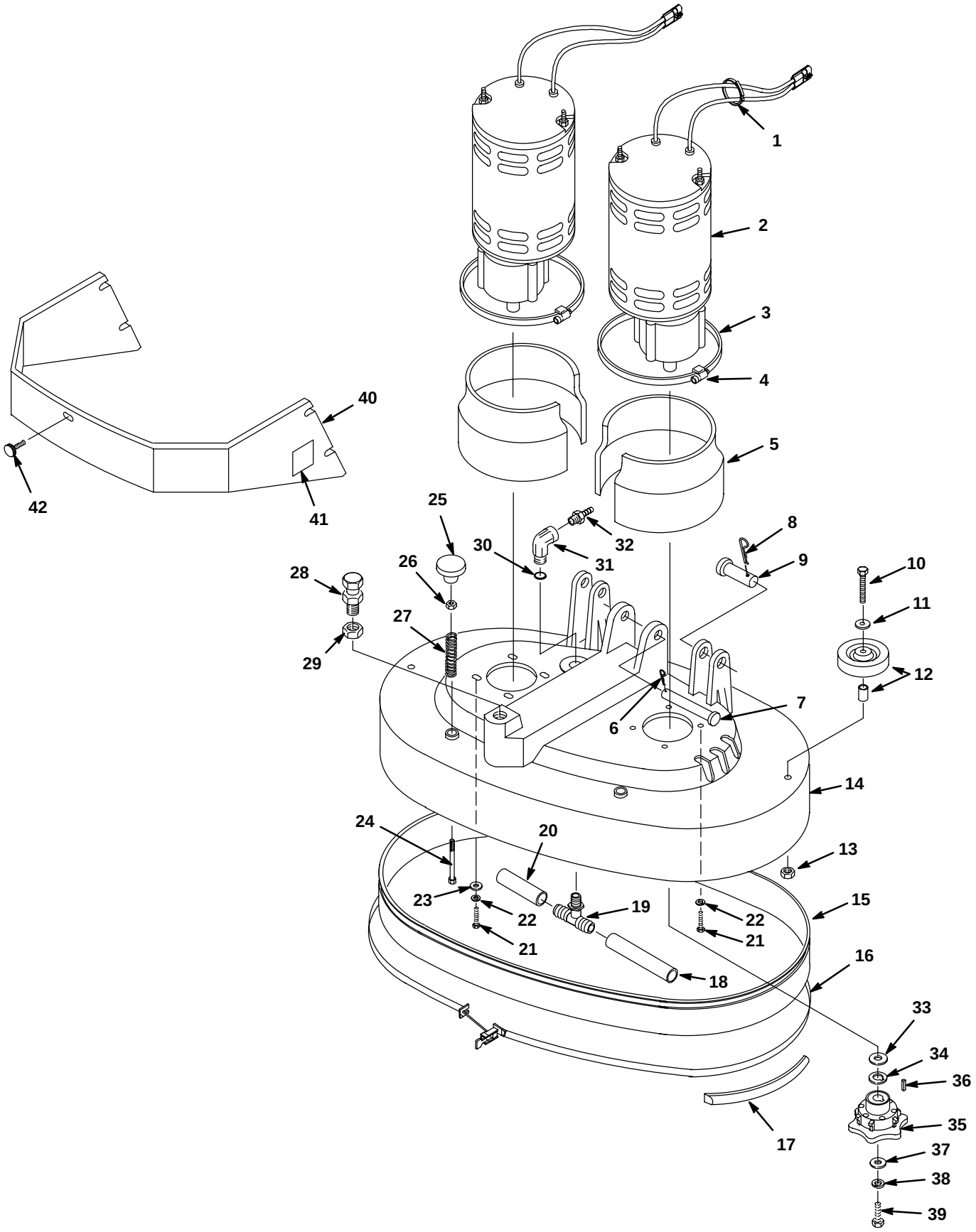

DISK SCRUB HEAD GROUP, 610mm (24 in)

REF	PART #	DESCRIPTION	QTY.
∇	606761	KIT, SCRUBHEAD DSK, FIELD INST.	1
▲ 1	130040	WIRE TIE, NYLON 6 X .115	2
▲∇ 2	605054	●MOTOR, .75HP 270RPM 24VDC	2
▲▲	190741	●BRUSH, CARD ASM	2
▲▲	190970	●BRUSH, CARBON	4
▲▲	602088000	BEARING, .15 AND 3 HP MOTOR	1
▲▲	630607	BEARING, LOWER	1
▲▲	630609	GEARBOX ASSEMBLY	1
▲ 3	606883	BAND, SS 16.12”	2
▲ 4	602044000	FASTENER, ADJUSTING	2
▲ 5	611691	SHROUD, WATER, MOTOR	2
▲ 6	140626	●PIN, HITCH	1
▲ 7	606078	●CLEVIS PIN, .375DIA X 3	1
▲ 8	02942	●PIN HAIR, .12 WIRE 2.375	2
▲ 9	222210	●PIN CLEVIS, .625 DIA X 2.12	2
▲ 10	222505	SCREW, M8X1.25X45 HXHDCP	2
▲ 11	32491	WASHER, 5/16 FLAT	2
▲ 12	630450	●WHEEL, RUBBER	2
▲ 13	08709	NUT, M8 HXLCK	2
▲ 14	604978	CASTING, DISC SCRUB HEAD	1
▲ 15	604981	●SKIRT, SCRUB HEAD	1
▲ 16	606054	●BAND, SKIRT RETAINING	1
▲ 17	606884	●SKID STRIP, 1.219M (48”)	1
▲ 18	606885	TUBING, 3/8 ID X 7.75”	1

REF	PART #	DESCRIPTION	QTY.
▲ 19	605052	FITTING, 1/8”NPTM X 3/8”	1
▲ 20	606886	TUBING, 3/8 ID X 2.75”	1
▲ 21	140202	SCREW, 3/8–16X1 HXHDCP	8
▲ 22	140017	WASHER, 3/8 LOCK	8
▲ 23	140028	WASHER, 3/8 FLAT	4
▲ 24	606072	SCREW, 3/8–16X4.5 HXHDCP	2
▲ 25	626083	●KNOB, 3/8	2
▲ 26	039708223	NUT, 3/8–16 HXJM	2
▲ 27	626081	●SPRING, COMP	2
▲ 28	606548	ADJUSTER, STUD	1
▲ 29	3147	NUT, HEAVY HEX JAM 5/8–11	1
▲ 30	605058	O–RING	1
▲ 31	605047	FITTING, 90 ELBOW	1
▲ 32	069764592	FITTING, 1/2MX1/2H	1
▲ 33	069760023	WASHER, .77 FLAT	2
▲ 34	621471	SPACER, .75X1.12	2
▲ 35	626022	●HUB, DRIVE	2
▲ 36	630454	KEY, SQUARE, .25” X 1.12”LG	2
▲ 37	069764631	WASHER, M8.4 FLAT	2
▲ 38	140015	WASHER, 5/16 LOCK	2
▲ 39	140221	SCREW, 5/16–18X1–1/4 HXHDCP	2
▲ 40	606147	SHROUD, SCRUB HEAD	1
▲ 41	578769	DECAL, MOVING PARTS	2
▲ 42	603012	KNOB, M6	5

∇ ASSEMBLY

▲ INCLUDED IN ASSEMBLY

● RECOMMENDED STOCK ITEMS

DISK SCRUB HEAD GROUP, 660mm (26 in)

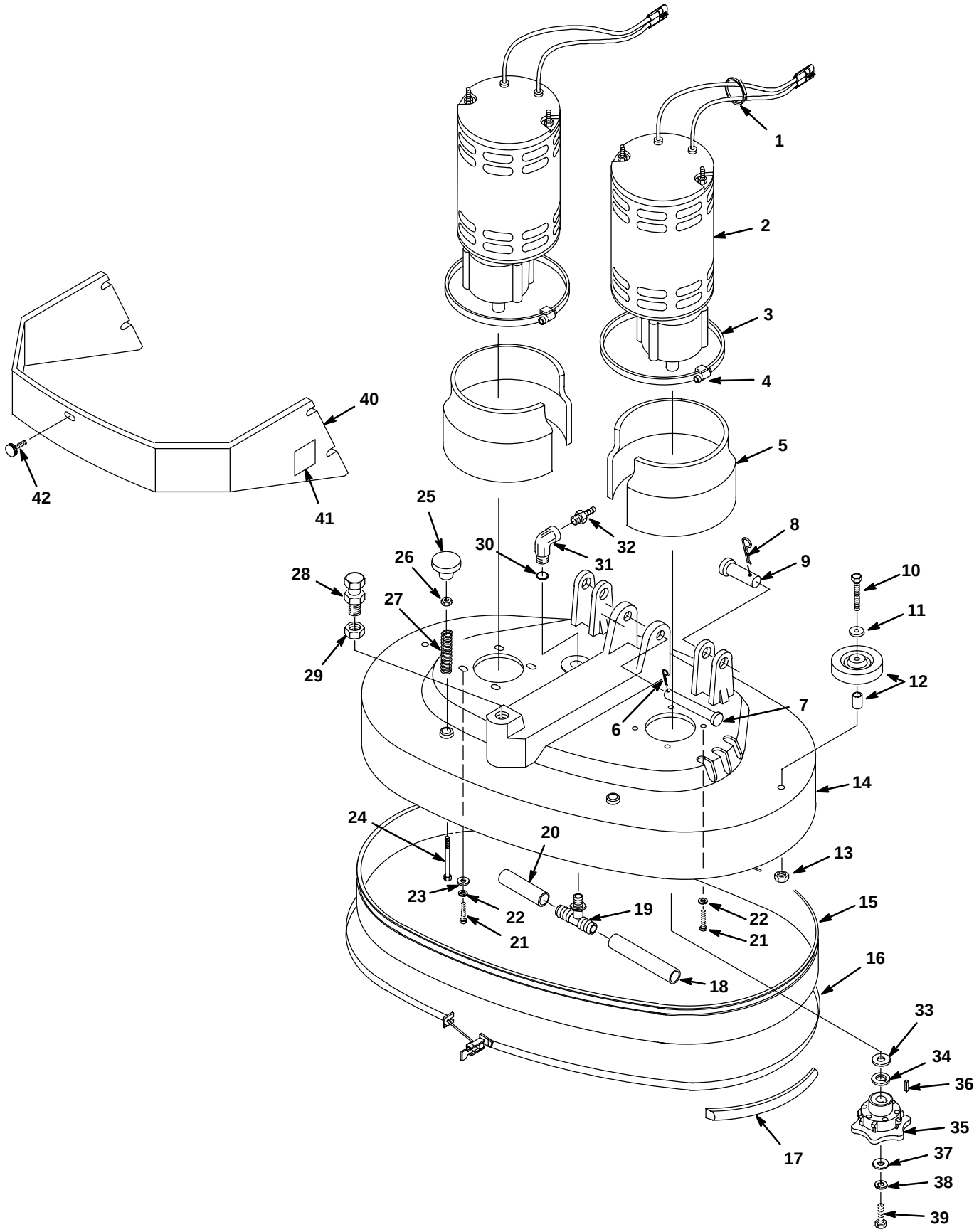

DISK SCRUB HEAD GROUP, 660mm (26 in)

REF	PART #	DESCRIPTION	QTY.
∇	610873	KIT, SCRUBHEAD, DSK, FIELD INST.	1
▲ 1	130040	WIRE TIE, NYLON 6 X .115	2
▲∇ 2	605054	●MOTOR, .75HP 270RPM 24VDC	2
▲▲	190741	●BRUSH, CARD ASM	2
▲▲	190970	●BRUSH, CARBON	4
▲▲	602088000	BEARING, .15 AND 3 HP MOTOR	1
▲▲	630607	BEARING, LOWER	1
▲▲	630609	GEARBOX ASSEMBLY	1
▲ 3	606883	BAND, SS 16.12”	2
▲ 4	602044000	FASTENER, ADJUSTING	2
▲ 5	611691	SHROUD, WATER, MOTOR	2
▲ 6	140626	●PIN, HITCH	1
▲ 7	606078	●CLEVIS PIN, .375DIA X 3	1
▲ 8	02942	●PIN HAIR, .12 WIRE 2.375	2
▲ 9	222210	●PIN CLEVIS, .625 DIA X 2.12	2
▲ 10	222505	SCREW, M8X1.25X45 HXHDCP	2
▲ 11	32491	WASHER, 5/16 FLAT	2
▲ 12	630450	●WHEEL, RUBBER	2
▲ 13	08709	NUT, M8 HXLCK	2
▲ 14	609939	CASTING, DISC SCRUB HEAD 26”	1
▲ 15	610902	●SKIRT, SCRUB HEAD	1
▲ 16	626136	●BAND, SKIRT RETAINING	1
▲ 17	630613	●SKID STRIP, 1.289M (50.75”)	1
▲ 18	609470	TUBING, 3/8 ID X 8”	1

REF	PART #	DESCRIPTION	QTY.
▲ 19	605052	FITTING, 1/8”NPTM X 3/8”	1
▲ 20	606362	TUBING, 3/8 ID X 3”	1
▲ 21	140202	SCREW, 3/8–16X1 HXHDCP	8
▲ 22	140017	WASHER, 3/8 LOCK	8
▲ 23	140028	WASHER, 3/8 FLAT	4
▲ 24	606072	SCREW, 3/8–16X4.5 HXHDCP	2
▲ 25	626083	●KNOB, 3/8	2
▲ 26	039708223	NUT, 3/8–16 HXJM	2
▲ 27	626081	●SPRING, COMP	2
▲ 28	606548	ADJUSTER, STUD	1
▲ 29	3147	NUT, HEAVY HEX JAM 5/8–11	1
▲ 30	605058	O–RING	1
▲ 31	605047	FITTING, 90 ELBOW	1
▲ 32	069764592	FITTING, 1/2MX1/2H	1
▲ 33	069760023	WASHER, .77 FLAT	2
▲ 34	621471	SPACER, .75X1.12	2
▲ 35	626022	●HUB, DRIVE	2
▲ 36	630454	KEY, SQUARE, .25” X 1.12”LG	2
▲ 37	069764631	WASHER, M8.4 FLAT	2
▲ 38	140015	WASHER, 5/16 LOCK	2
▲ 39	140221	SCREW, 5/16–18X1–1/4 HXHDCP	2
▲ 40	606147	SHROUD, SCRUB HEAD	1
▲ 41	578769	DECAL, MOVING PARTS	2
▲ 42	603012	KNOB, M6	5

∇ ASSEMBLY

▲ INCLUDED IN ASSEMBLY

● RECOMMENDED STOCK ITEMS

CYLINDRICAL BRUSH SCRUB HEAD GROUP, 610mm (24 in)

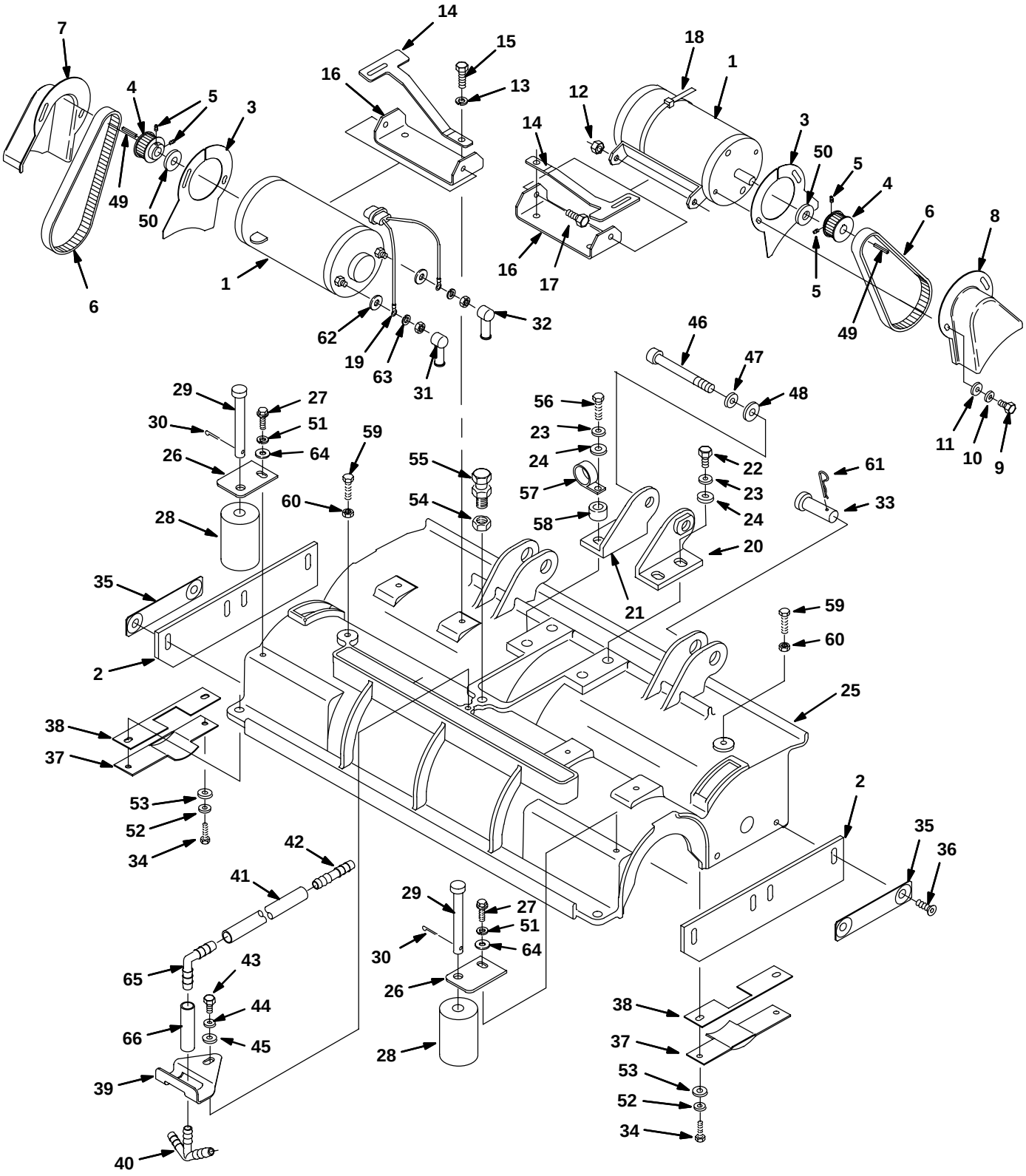

CYLINDRICAL BRUSH SCRUB HEAD GROUP, 610mm (24 in)

REF	PART #	DESCRIPTION	QTY.
∇	606760	KIT, SCRUBHEAD, CYL, FIELD INST.	1
▲ 1	604980	●MOTOR, 24V, 1500RPM, 23AMP	2
	190152	●CARBON BRUSH (PKG OF 4)	2
	605305	●SPRING NEGATOR	8
▲ 2	608473	●SKIRT, SIDE CYL. SCRUBHEAD	2
▲ 3	223563	SHIELD, BELT	2
▲ 4	222202	●SPROCKET, DRIVE	2
▲ 5	222818	●SCREW, SET 8–32 X .25 NYLON	4
▲ 6	397688	●BELT, SYNCHRONOUS	2
▲ 7	223560	GUARD, BELT RH	1
▲ 8	223561	GUARD, BELT LH	1
▲ 9	15678	SCREW, M6X1X16 HEX	4
▲ 10	200662017	WASHER, LOCK 6.4ID	4
▲ 11	140000	WASHER, 1/4 FLAT	4
▲ 12	08709	NUT, M8 HXLCK	4
▲ 13	200370019	WASHER, M8.4 LOCK	4
▲ 14	222209	SPRING, DOOR	2
▲ 15	200031488	SCREW M8X1.25X20 HXHDCP	4
▲ 16	606533	BRACKET, MOUNTING, MOTOR	2
▲ 17	200031488	SCREW M8X1.25X20 HXHDCP	4
▲ 18	130773	WIRE TIE	4
▲ 19	606795	●HARNESS, MOTOR	2
▲ 20	607805	BRACKET, CYL–HEAD, LH	1
▲ 21	607804	BRACKET, CYL–HEAD, RH	1
▲ 22	200031488	SCREW M8X1.25X20 HXHDCP	3
▲ 23	200370019	WASHER, M8.4 LOCK	4
▲ 24	32491	WASHER, 5/16 FLAT	4
▲ 25	606672	SCRUBBER HEAD, CYL BRUSH, 610MM (24 IN)	1
▲ 26	222179	BRACKET, ROLLER	2
▲ 27	200031488	SCREW M8X1.25X20 HXHDCP	2
▲ 28	222178	●ROLLER, WALL	2
▲ 29	222196	PIN, CLEVIS, .5 DIA, 4.25 LG	2
▲ 30	578421	PIN, COTTER, 1/8X1	2
▲ 31	608963	BOOT, TERMINAL RED	2
▲ 32	608964	BOOT, TERMINAL BLACK	2
▲ 33	222210	●PIN CLEVIS, .62 DIA X 2.12 L	2

REF	PART #	DESCRIPTION	QTY.
▲ 34	15678	SCREW, M6X1X16 HEX	4
▲ 35	222182	●BAR, SUPPORT	4
▲ 36	79506	SCREW, M8X1.25X30 FLAT	8
▲ 37	223566	●BRACKET, SHIELD	2
▲ 38	223569	●GASKET, SHIELD	2
▲ 39	606569	BRACKET, T–FITTING, SCRUB-HEAD	1
▲ 40	222536	●TEE, FITTING, BARB	1
▲ 41	608176	●HOSE, REINFORCED 1/2ID	1
▲ 42	606674	●CONNECTOR, UNION .5X.5	1
▲ 43	200031488	SCREW M8X1.25X20 HXHDCP	1
▲ 44	200370019	WASHER, M8.4 LOCK	1
▲ 45	32491	WASHER, 5/16 FLAT	1
▲ 46	605050	SCREW, 3/8–16X2.75	1
▲ 47	140022	WASHER, 3/8 LOCK	1
▲ 48	140046	WASHER, 1.00X.392X0.90	1
▲ 49	00954	●KEY, SQUARE, .12X.12X1.0LG	2
▲ 50	630447	●WASHER, NYLON, 12.7, 25.4	2
▲ 51	200370019	WASHER, M8.4 LOCK	2
▲ 52	200662017	WASHER, LOCK, 6.4ID	4
▲ 53	140000	WASHER, 1/4 FLAT	4
▲ 54	3147	●NUT, HEAVY HEX JAM 5/8–11	1
▲ 55	606548	●STUD, ADJUSTER	1
▲ 56	200031499	SCREW, M8X1.25X40	1
▲ 57	140314	CLAMP, CABLE INSULATED 3/4ID	1
▲ 58	069767163	SPACER, 1X.75	1
▲ 59	578717	SCREW, M8X1.25X50	2
▲ 60	07786	NUT, M8 HEX	2
▲ 61	02942	●PIN, HAIR, CTR, .62D .12 WIRE	2
▲ 62	6306.4	WASHER, 1/4 FLAT	4
▲ 63	200370019	WASHER, M8.4 LOCK	4
▲ 64	32491	WASHER, 5/16 FLAT	2
▲ 65	604317	●ELBOW, 90° 1/2” ID	1
▲ 66	606225	●HOSE, 1/2” ID	1

∇ ASSEMBLY

▲ INCLUDED IN ASSEMBLY

● RECOMMENDED STOCK ITEMS

CYLINDRICAL BRUSH SCRUB HEAD GROUP, 610mm (24 in) - CONT.

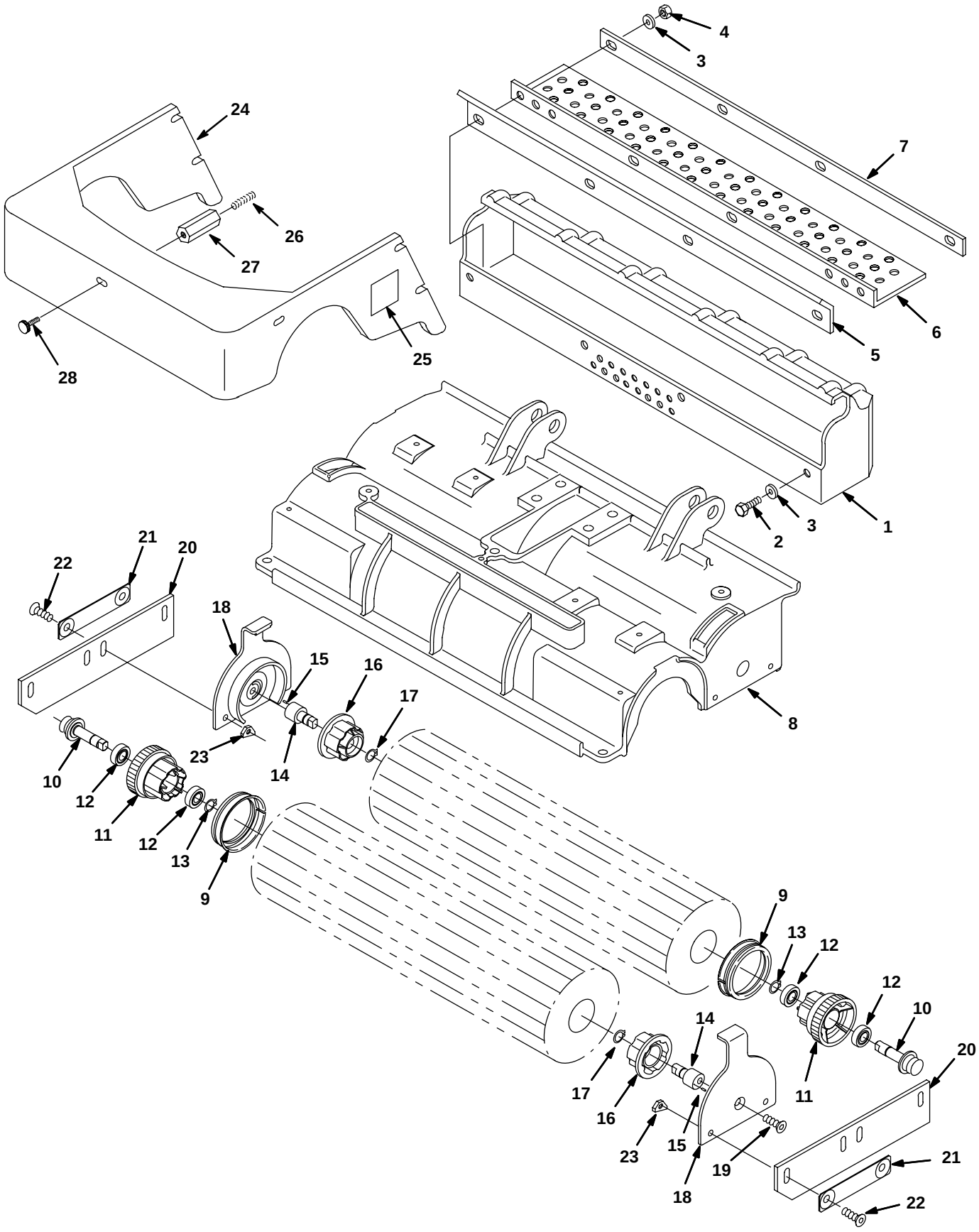

CYLINDRICAL BRUSH SCRUB HEAD GROUP, 610mm (24 in) - CONT.

REF	PART #	DESCRIPTION	QTY.
∇	606760	KIT, SCRUBHEAD, CYL, (CONT.)	1
▲ 1	608167	HOPPER, DEBRIS, 610MM (24 IN)	1
▲ 2	09007	SCREW, M6X1X25 HXHDCP	4
▲ 3	140000	WASHER, 1/4 FLAT	8
▲ 4	08712	NUT, M6X1 NYLOCK	4
▲ 5	606657	LIP, HOPPER DEBRIS, 610MM (24 IN)	1
▲ 6	222669	SKIRT, HOPPER DEBRIS, 610MM (24 IN)	1
▲ 7	606656	STRIP, RETAINING, HOPPER, 610MM (24 IN)	1
▲ 8	606672	●SCRUBBER HEAD, CYLINDRICAL BRUSH 610 MM (24 IN)	1
▲ 9	222820	●SEAL, RING	2
▲∇	222751	●PLUG, DRIVE ASM	2
▲▲10	222176	●SHAFT, DRIVE PLUG	2
▲▲11	222062	●PLUG, BRUSH DRIVE	2
▲▲12	41360	●BEARING, BALL, 0.59B 1.26D 0.35W	4
▲▲13	01516	●RING, RETAIN, EX, 0.59OD,BASIC	2

REF	PART #	DESCRIPTION	QTY.
▲∇	222752	●PLUG, IDLER ASM	2
▲▲14	222177	●SHAFT, IDLER PLUG	2
▲▲15	222184	●PIN, ROLL	2
▲▲16	379202	●PLUG, BRUSH	2
▲▲17	01516	●RING, RETAIN, EX,0.59OD	2
▲ 18	369460	●DOOR, BRUSH	2
▲ 19	390996	●SCREW, M10X1.5X20 FLAT	2
▲ 20	608473	●SKIRT, SCRUB HEAD, SIDE	2
▲ 21	222182	●BAR, SUPPORT	4
▲ 22	79506	●SCREW, M8X1.25X30 FLAT	8
▲ 23	607256	●NUT, RETAINER, SKIRT	4
▲ 24	607992	SHROUD, CYLINDRICAL BRUSH	1
▲ 25	578769	DECAL, MOVING PARTS	2
▲ 26	200251444	●SCREW, SET M6X30MM	1
▲ 27	608191	STANDOFF, SHROUD, SCRUB-HEAD	1
▲ 28	603012	KNOB, M6	7

∇ ASSEMBLY

▲ INCLUDED IN ASSEMBLY

● RECOMMENDED STOCK ITEMS

SOLUTION FLOW GROUP

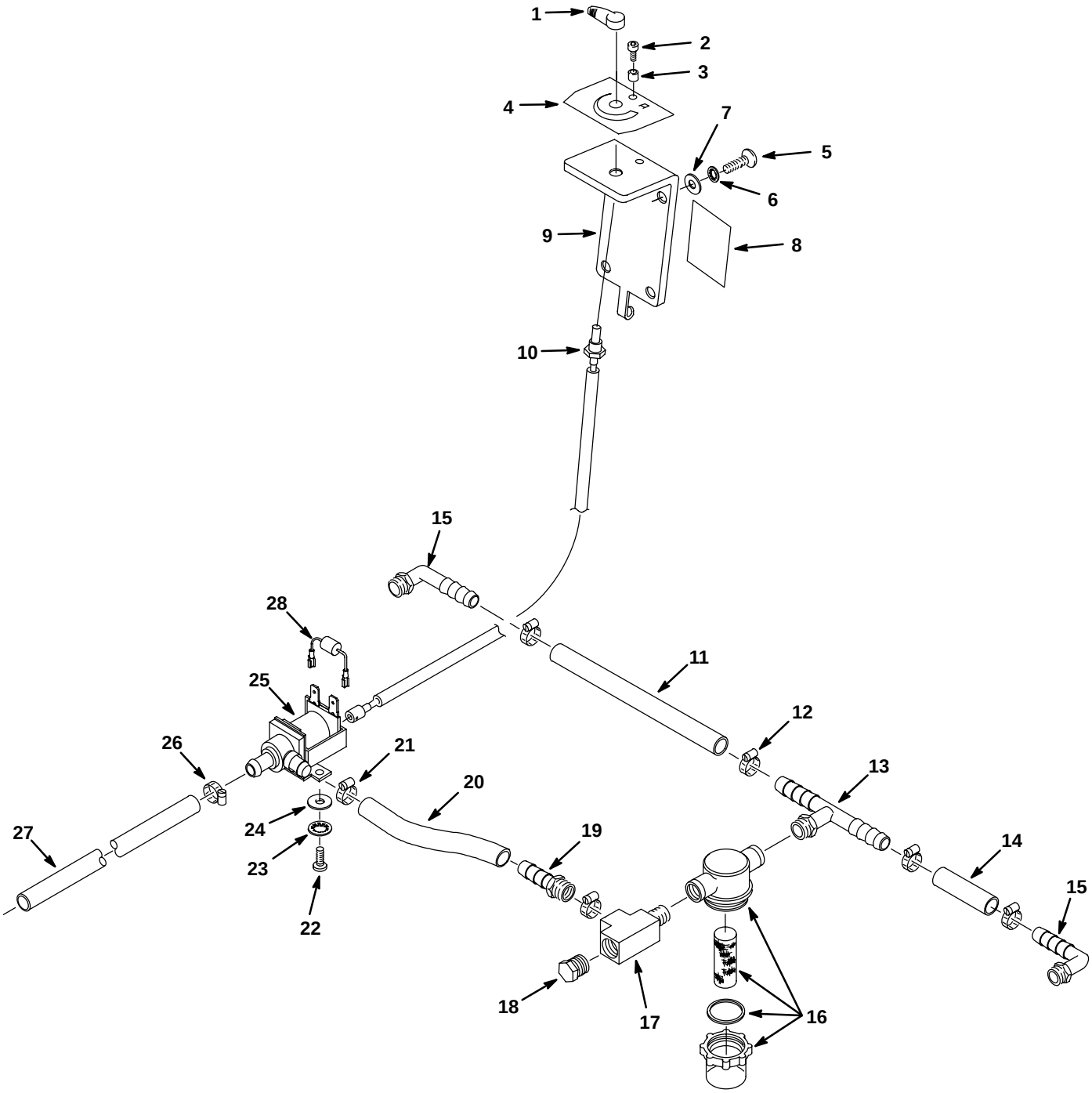

SOLUTION FLOW GROUP

REF	PART #	DESCRIPTION	QTY.
1	630116	●KNOB, VALVE ADJUSTING	1
2	200001343	SCREW, M4X.7X12 SKHDCP	1
3	630452	SPACER, 4.3X8.0X5.0	1
4	630233	DECAL, FLOW CONTROL	1
5	608322	SCREW, M6X1.0X16 TRSPHL	4
6	578244000	WASHER, M6.4 LOCK	4
7	140000	WASHER, 1/4 FLAT	4
8	578729	DECAL, READ MANUAL	1
9	606061	BRACKET, SOLUTION FLOW KNOB	1
10	606053	●CABLE, SOLUTION FLOW	1
11	069760725	HOSE, SOLUTION 1/2IDX3.25”	1
12	54333	CLAMP, HOSE	4
13	605046	FITTING, TEE	1
14	069760726	HOSE, 0.5ID X 225MM	1

REF	PART #	DESCRIPTION	QTY.
15	578039000	FITTING, 3/8MX1/2H ELBOW	2
16	601475	●SCREEN, 40 MESH	1
17	601483	TEE, STREET 3/8 NPT	1
18	630146	PLUG, 3/8”NPT, NYLON	1
19	14884	FITTING, 3/8MX1/2H	1
20	069760725	HOSE, SOLUTION 1/2IDX3.25”	1
21	54333	CLAMP, HOSE	2
22	608322	SCREW, M6X1.0X16 TRSPHL	2
23	578244000	WASHER, M6.4 LOCK	2
24	140000	WASHER, 1/4 FLAT	2
25	603310	●VALVE, SOLENOID 24VDC	1
26	54333	CLAMP, HOSE	1
27	606887	HOSE, 1/2 ID X 20.5”	1
28	607394	ASM, DIODE	1

● RECOMMENDED STOCK ITEMS

SQUEEGEE CONTROL GROUP

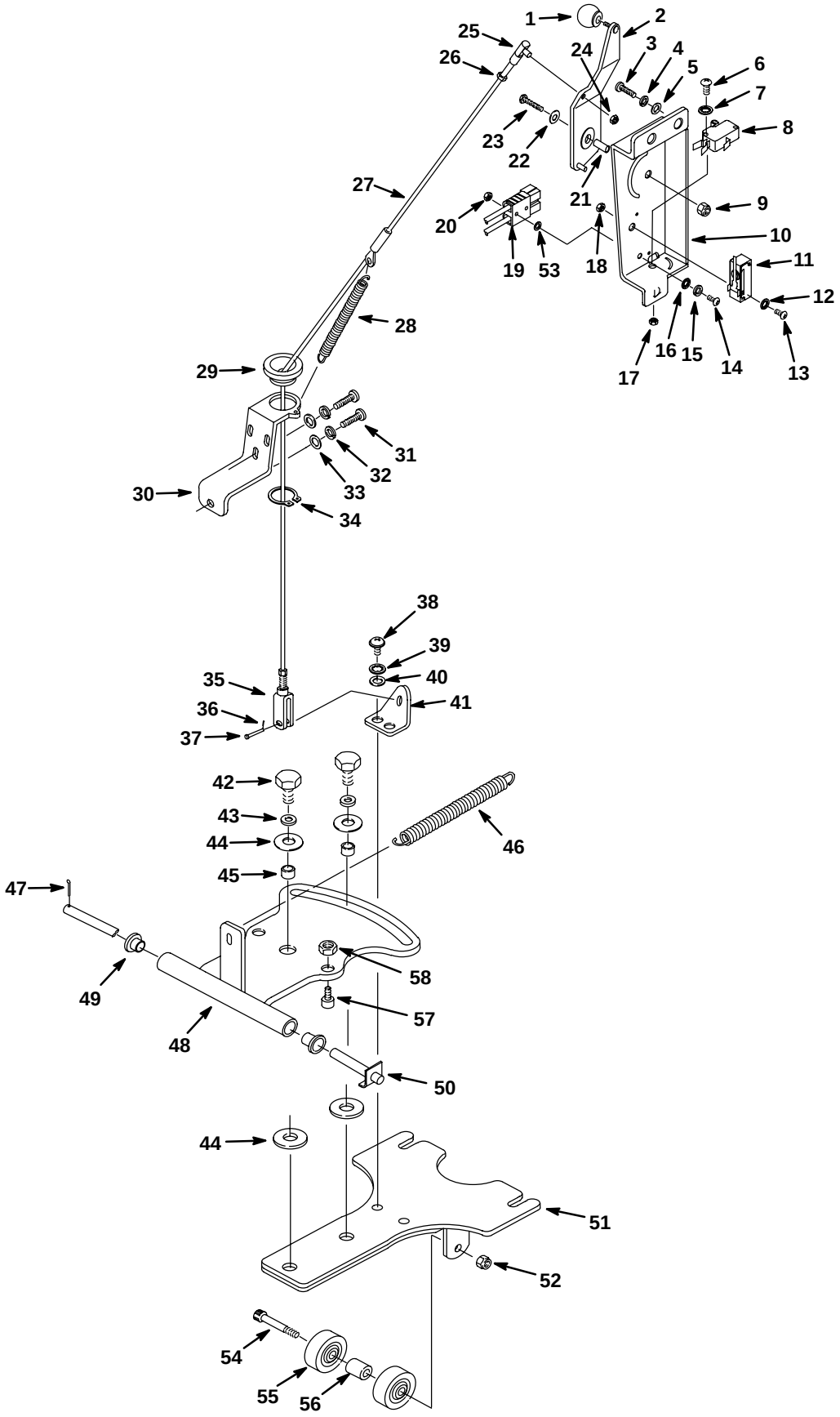

SQUEEGEE CONTROL GROUP

REF	PART #	DESCRIPTION	QTY.
1	601425	●KNOB, SQUEEGEE LEVER	1
2	612835	LEVER, SQUEEGEE	1
3	200031488	SCREW M8X1.25X20 HXHDCP	3
4	200370019	WASHER, M8.4 LOCK	3
5	32491	WASHER, 5/16 FLAT	3
6	579213	SCREW, M3X.5X20 HXHDCP	2
7	601127000	WASHER, M3.7 FLAT	2
8	600437	●SWITCH, ROLLER 15A	1
9	08709	NUT, M8 HXLCK	1
10	612834	BRACKET, SQUEEGEE LEVER	1
11	069764009	●SWITCH, SNAP, 25A, LEVER	1
12	140026	WASHER, #6 FLAT	2
13	140829	SCREW, #6–32X1 PANPHL	2
14	140829	SCREW, #6–32X1 PANPHL	2
15	140026	WASHER, #6 FLAT	2
16	140019	WASHER, #6 LOCK	2
17	579211	NUT, M3	2
18	140066	NUT, #6–32	2
19	605387	●CONNECTOR, RED 50A W/O CONTACTS	1
20	140066	NUT, #6–32	2
21	069760417	●SLEEVE	1
22	25732	WASHER, 1.25X.359X.093 FLAT	1
23	200031494	SCREW, M8X1.25X30 HXHD	1
24	13513	NUT, 1/4–28 HEXLCK	1
25	069760371	●BALL JOINT	1
26	607953	NUT, 1/4–28 HEX JAM	1
27	605051	●CABLE, SQUEEGEE LIFT	1
28	605063	●SPRING, SQUEEGEE LEVER	1
29	621235	●BUSHING, CABLE	1

REF	PART #	DESCRIPTION	QTY.
30	606012	BRACKET, CABLE GUIDE	1
31	608322	SCREW, M6X1.0X16 TRSPHL	3
32	578244000	WASHER, M6.4 LOCK	3
33	140000	WASHER, 1/4 FLAT	3
34	621236000	●RING, RETAINING	1
35	605068	●YOKE, ADJUSTMENT	1
36	08170	●PIN, COTTER	1
37	605070	●PIN, CLEVIS	1
38	608322	SCREW, M6X1.0X16 TRSPHL	2
39	578244000	WASHER, M6.4 LOCK	2
40	140000	WASHER, 1/4 FLAT	2
41	605066	BRACKET, SQUEEGEE CABLE	1
42	140237	SCREW, 1/2–13X1 HXHDCP	2
43	140024	WASHER, 1/2 LOCK	2
44	140045	WASHER, .510X1.25X.06 FLT	4
45	140139	BUSHING, BRUSH LIFT PEDAL	2
46	140423	●SPRING, BRUSH PRESSURE	1
47	578421	PIN, COTTER	1
∇ 48	610206	BRACKET, SQUEEGEE PIVOT	1
▲ 49	606058	●BEARING, FLANGE	2
50	606057	PIN, HEADLESS	1
51	610205	BRACKET, SQUEEGEE MOUNT	1
52	601108000	NUT, 5/16–18 HXLCK	1
53	140011	WASHER, 3/16 FLAT	2
54	603144	SCREW, SHOULDER	1
55	630477	●WHEEL	2
56	603368	●SPACER	1
57	607010	*SCREW, M10X1.5X20 SHCS	2
58	200160018	*NUT, M10 HEXLCK	2

∇ ASSEMBLY

▲ INCLUDED IN ASSEMBLY

● RECOMMENDED STOCK ITEMS

* HARDWARE REQUIRED FOR CYCLINDRICAL BRUSH MODEL ONLY.

SQUEEGEE ASSEMBLY GROUP – STD. WIDTH, 838mm (33 in)

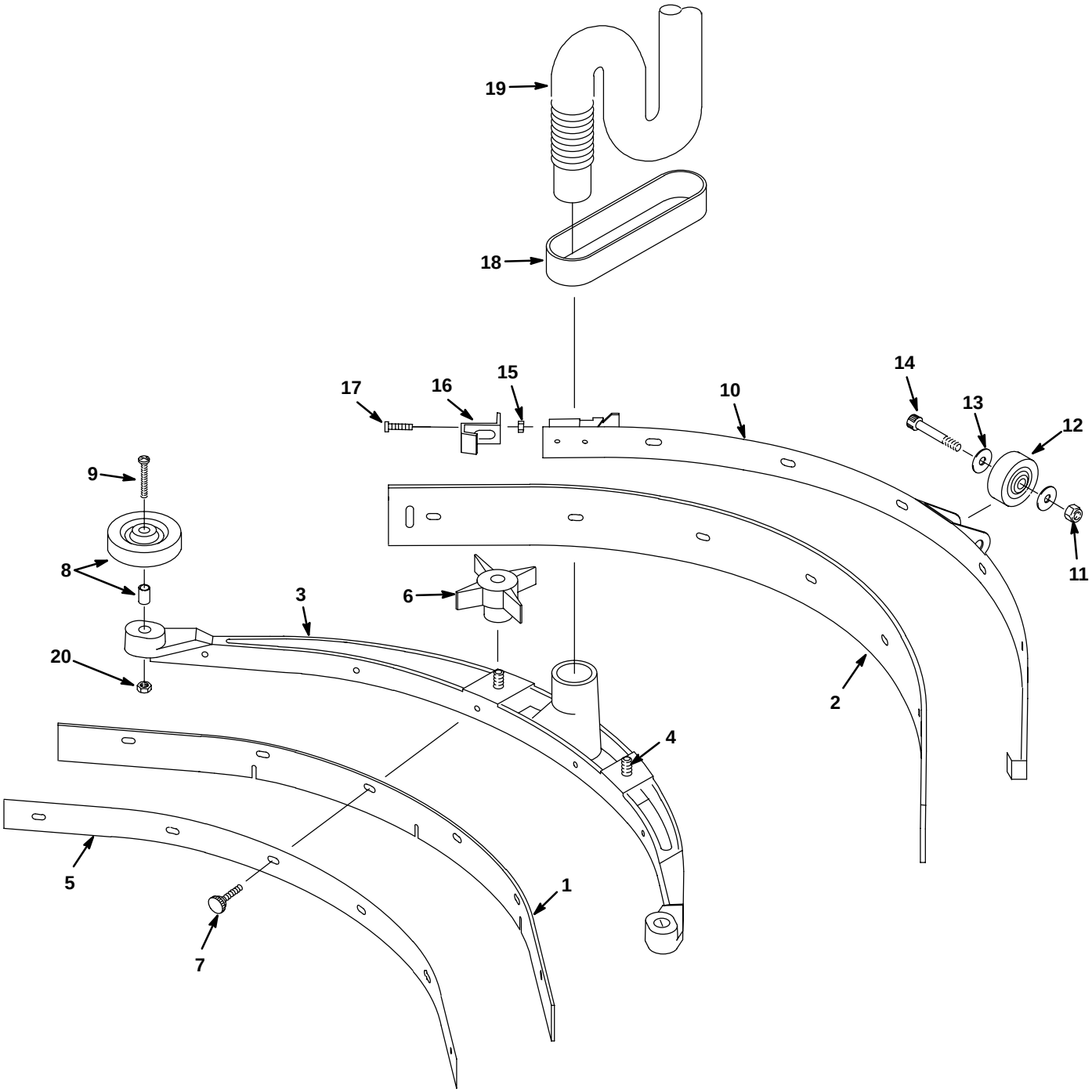

SQUEEGEE ASSEMBLY GROUP – STD. WIDTH, 838mm (33 in)

REF	PART #	DESCRIPTION	QTY.
∇	612025	ASSEMBLY, SQUEEGEE, LINATEX	1
▲∇	606758	●KIT, SQUEEGEE BLADES, LINATEX	1
▲ 1	605030	●BLADE, FRONT SQUEEGEE, LINATEX (RED)	1
▲ 2	605029	●BLADE, REAR SQUEEGEE, LINATEX (RED)	1
∇	613036	ASSEMBLY, SQUEEGEE, GUM RUBBER	1
▲∇	606757	●KIT, SQUEEGEE BLADES, GUM RUBBER	1
▲ 1	605028	●BLADE, FRONT SQUEEGEE, GUM RUBBER (TAN)	1
▲ 2	605027	●BLADE, REAR SQUEEGEE, GUM RUBBER (TAN)	1
∇	606743	ASSEMBLY, SQUEEGEE, URETHANE	1
▲∇	606759	●KIT, SQUEEGEE BLADES, URETHANE	1
▲ 1	605032	●BLADE, FRONT SQUEEGEE, URETHANE (WHITE)	1
▲ 2	605031	●BLADE, REAR SQUEEGEE, URETHANE (WHITE)	1

REF	PART #	DESCRIPTION	QTY.
▲ 3	611462	CASTING, SQUEEGEE	1
▲ 4	140799	SCREW, 5/16–18X1–1/2 TRSPHL	2
▲ 5	605034	RETAINER, FRONT STRIP	1
▲ 6	370100	●KNOB, 5/16	2
▲ 7	603012	●KNOB, FRONT SQUEEGEE	6
▲ 8	630450	WHEEL, 76 DIA X 22	2
▲ 9	611489	SCREW, 5/16–18X1–3/4	2
▲ 10	605033	SQUEEGEE, BAND ASM REAR	1
▲ 11	601108000	NUT, 5/16–18 HXLCK	1
▲ 12	630477	●WHEEL	1
▲ 13	140028	WASHER, 3/8 FLAT	2
▲ 14	600187	SCREW, SHOULDER, 3/8 X 1 1/4	1
▲ 15	09739	NUT, M5X.8 NYLOCK	1
▲ 16	605069	CLIP, SQUEEGEE BAND	1
▲ 17	630389	SCREW, M5 7/8X45 PANPHL	1
18	630333	●STRAP, SQUEEGEE HOSE	1
19	605041	●HOSE, SQUEEGEE	1
▲ 20	140506	NUT, 5/16–18	2

∇ ASSEMBLY

▲ INCLUDED IN ASSEMBLY

● RECOMMENDED STOCK ITEMS

BATTERY AND CHARGER GROUP

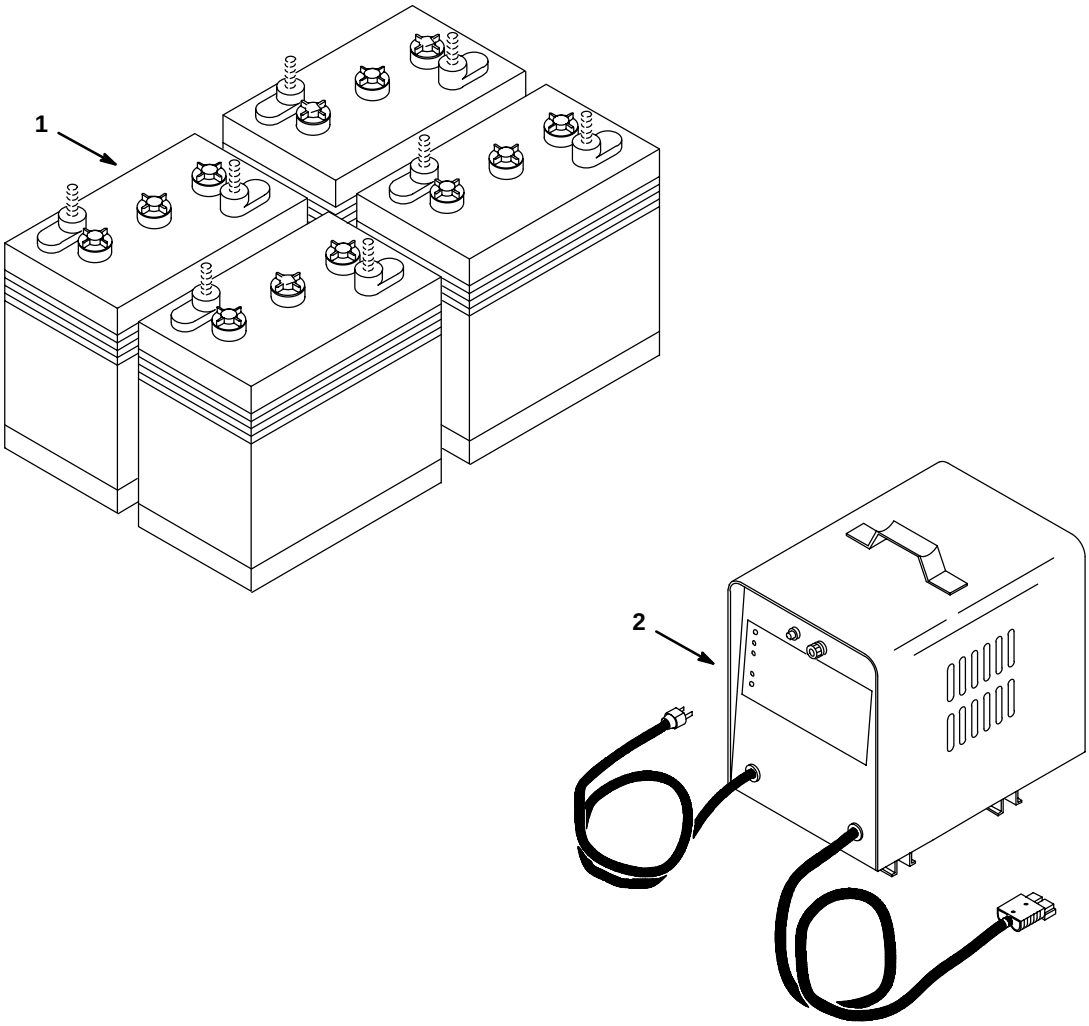

REF	PART #	DESCRIPTION	QTY.
∇ 1	606897	BATTERY KIT (SET OF 4)	1
▲	222280	BATTERY, 6V, RESCAP, 129 WET	4

REF	PART #	DESCRIPTION	QTY.
2	603235	CHARGER, 24DC, 20A, 120AC	1

∇ ASSEMBLY

▲ INCLUDED IN ASSEMBLY

BATTERY CABLE GROUP

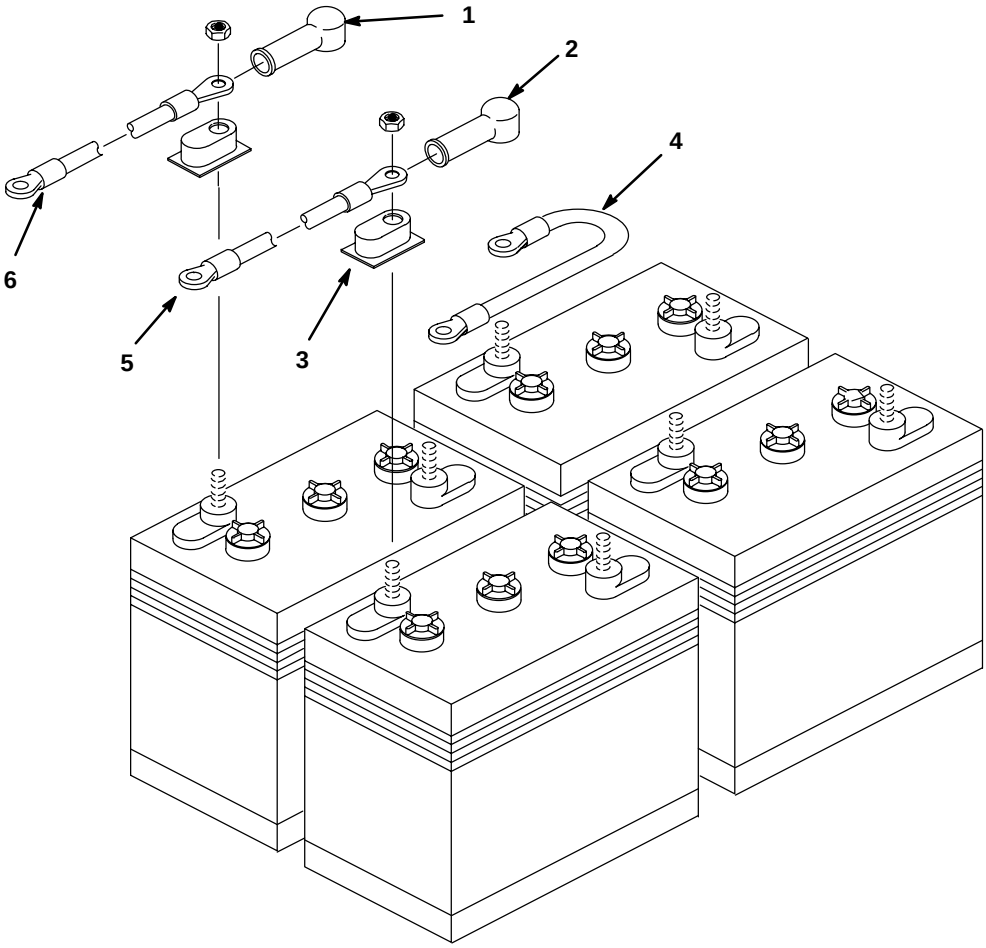

REF	PART #	DESCRIPTION	QTY.
1	611221	TERMINAL BOOT, BLACK	4
2	611222	TERMINAL BOOT, RED	4
3	45962	COVER, TERMINAL	8

REF	PART #	DESCRIPTION	QTY.
4	130364	CABLE, BATT. #6 BLKX15” 5/16X3/8	3
5	602872	CABLE, BATT. REDX28”	1
6	602871	CABLE, BATT. BLKX24”	1

SQUEEGEE ASSEMBLY GROUP – EXTRA WIDE, 940mm (37 in)

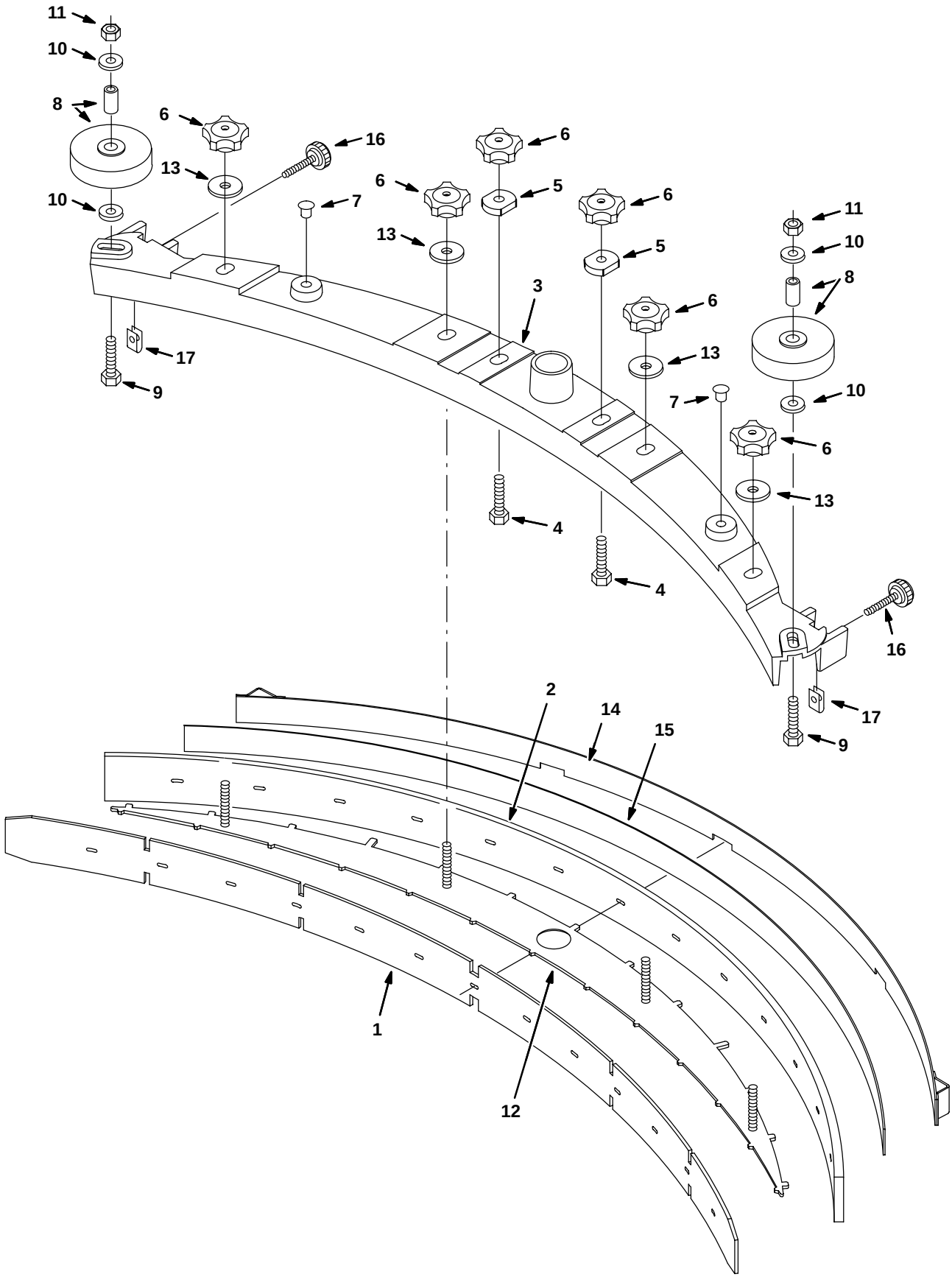

SQUEEGEE ASSEMBLY GROUP – EXTRA WIDE, 940mm (37 in)

REF	PART #	DESCRIPTION	QTY.
∇	609154	ASSEMBLY, SQUEEGEE, EX–WIDE, LINATEX & GUM RUBBER	1
▲∇	609114	●KIT, SQUEEGEE BLADES, LINATEX & GUM RUBBER	1
▲ 1	222381	●BLADE, FRONT SQUEEGEE, 28” LINATEX (RED)	1
▲ 2	609056	●BLADE, REAR SQUEEGEE EX–WIDE GUM RUBBER (TAN)	1
∇	609155	ASSEMBLY, SQUEEGEE, EX–WIDE, LINATEX	1
▲∇	609115	●KIT, SQUEEGEE BLADES, LINATEX	1
▲ 1	222381	●BLADE, FRONT SQUEEGEE, 28” LINATEX (RED)	1
▲ 2	609055	●BLADE, REAR SQUEEGEE EX–WIDE LINATEX (RED)	1
∇	609156	ASSEMBLY, SQUEEGEE, EX–WIDE, URETHANE	1
▲∇	609116	●KIT, SQUEEGEE BLADES, URETHANE	1
▲ 1	222391	●BLADE, FRONT SQUEEGEE 28” URETHANE (WHITE)	1
▲ 2	609057	●BLADE, REAR SQUEEGEE EX–WIDE URETHANE (WHITE)	1
1	222385	●BLADE, FRONT SQUEEGEE 28” GUM RUBBER (TAN) (FOR GROUTED TILE FLOOR)	1

REF	PART #	DESCRIPTION	QTY.
▲ 3	609031	CASTING, SQUEEGEE EX–WIDE	1
▲ 4	140799	SCREW, 5/16–18X1–1/2 TRSPHL	2
▲ 5	608889	SPACER, SQUEEGEE 28”	2
▲ 6	605361	●KNOB, 5/16–18	6
▲ 7	130164	PLUG, DOME 3/8”	2
▲ 8	630450	WHEEL, 76 DIA X 22	2
▲ 9	222505	SCREW, M8X1.25X45 HEXHD	2
▲ 10	140027	WASHER, 5/16 FLAT	4
▲ 11	08709	NUT, M8	2
▲ 12	222368	PLATE, BLADE RETAINER 28”	1
▲ 13	140055	WASHER, .343X1.25X.051–.080	4
▲ 14	222378	BAND WELDMENT, SQUEEGEE BLADE 28”	1
▲ 15	609110	SPACER, SQUEEGEE EX–WIDE	1
▲ 16	222794	●KNOB, 1/4–20X1–1/2	2
▲ 17	82138	NUT, SPEED RETAINER .25–20	2

∇ ASSEMBLY

▲ INCLUDED IN ASSEMBLY

● RECOMMENDED STOCK ITEMS

ACCESSORY CONSOLE GROUP

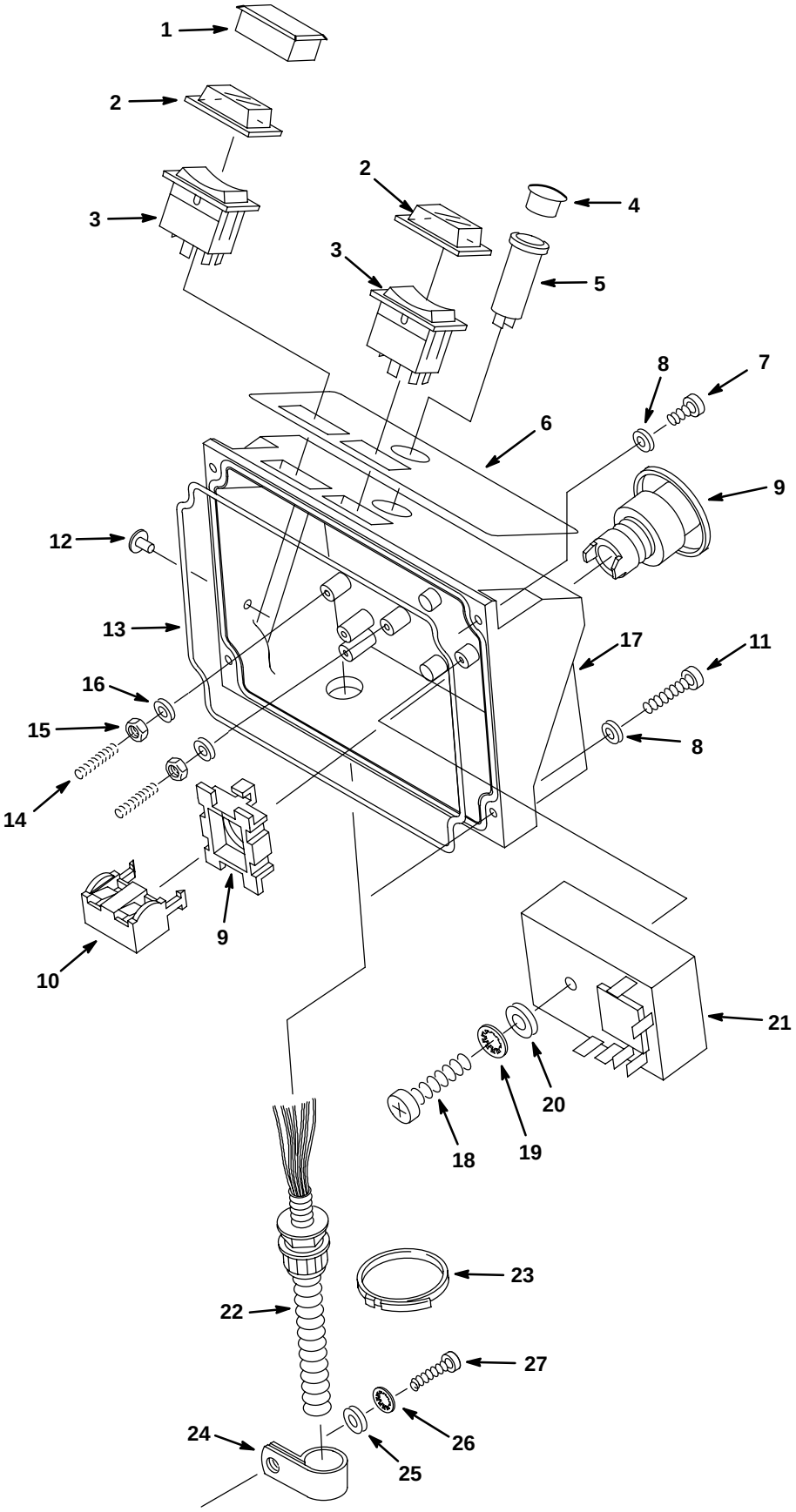

ACCESSORY CONSOLE GROUP

REF	PART #	DESCRIPTION	QTY.
	606762	●KIT, EMERGENCY STOP	1
	606763	●KIT, ES™/EMERGENCY STOP	1
	606764	●KIT, EMERGENCY STOP/WAND PUMP	1
	606765	●KIT, ES™/WAND PUMP/EMERG. STOP	1
	609099	●KIT, WAND PUMP ADD–ON	1
1	582150	●PLUG, ACCESSORY SWITCH	1
2	578720	●SPLASHGUARD, ROCKER SWITCH	2
3	630419	●SWITCH, ROCKER, SPST, 24VDC	2
4	069764626	●PLUG	1
5	630142	●LIGHT, PILOT, 24V	1
6	606522	DECAL, ES™/WAND CONSOLE	1
7	140287	SCREW, M4X.7X16 PANPHL	2
8	140023	WASHER, #8 LOCK	4
9	630100	●SWITCH, PUSHBUTTON E–STOP	1
10	630097	●SWITCH, CONTACT BLOCK	1
11	200070354	SCREW, M4X.7X30 PANPHL	2
12	578852	RIVET, SNAP	1

● RECOMMENDED STOCK ITEMS

N/S NOT SHOWN

REF	PART #	DESCRIPTION	QTY.
13	630442	0–RING	1
14	601271	SCREW, M4X.7X25	2
15	200102014	NUT, M4X.7	2
16	140023	WASHER, #8 LOCK	2
17	630140	CONSOLE, OPTIONS	1
18	630334	SCREW, #6X1–3/8 PANPHL	1
19	140023	WASHER, #8 LOCK	1
20	140026	WASHER, #6 FLAT	1
21	630145	●TIMER, 24VDC RANGE: 30SEC	1
22	606736	HARNESS, ES™ WIRE	1
23	130773	WIRE TIE, 6/64 X 11” BLACK	1
24	606727	CLAMP, 5/8 DIA	1
25	200301014	WASHER, M4.3 FLAT	1
26	140023	WASHER, #8 LOCK	1
27	579259	SCREW, M4X.7X12 PANPHL	1
N/S	606734	HARNESS, E–STOP WIRE	1
N/S	606735	HARNESS, WAND PUMP WIRE	1
N/S	606736	HARNESS, ES™ PUMP	1

ES™ SOLUTION GROUP

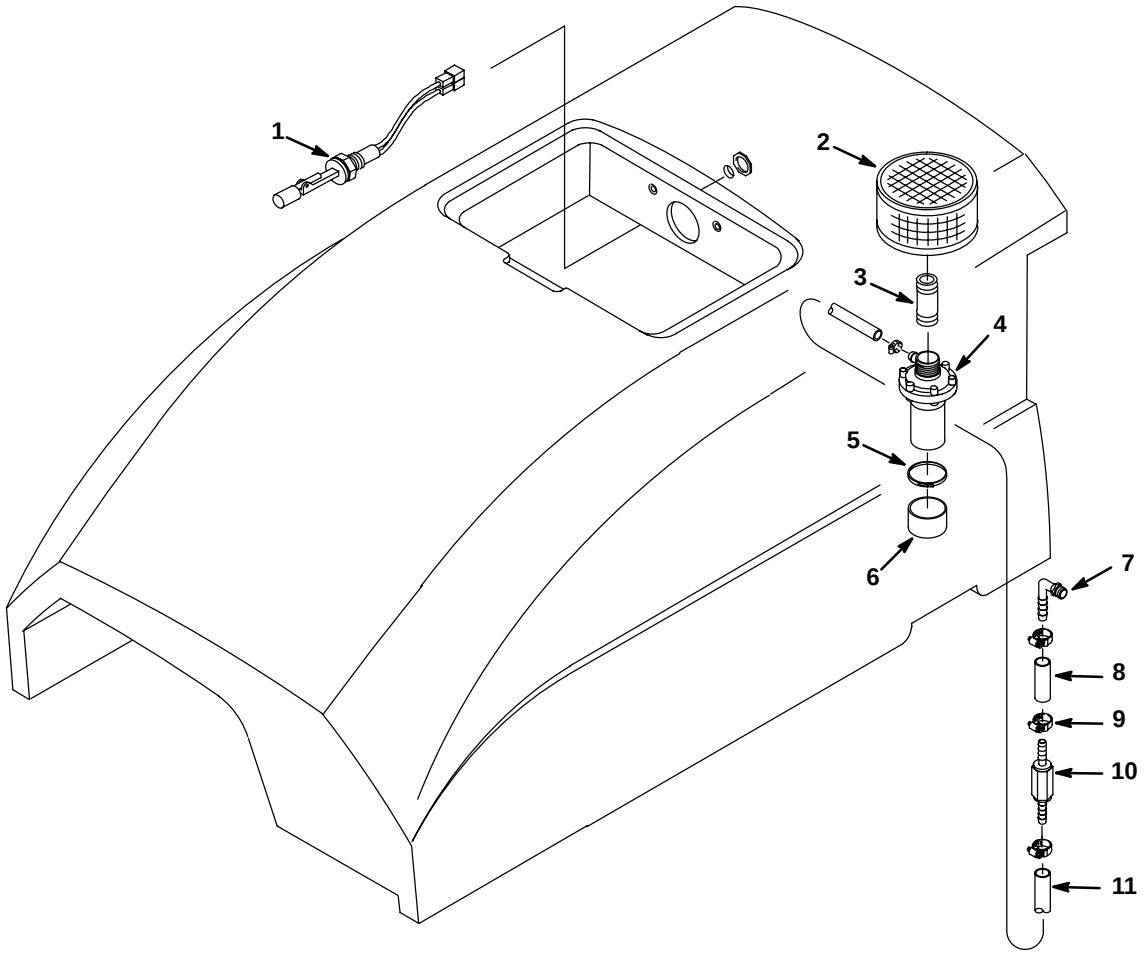

REF	PART #	DESCRIPTION	QTY.
1	603166	●SWITCH, LIQUID LEVEL	1
2	630138	●FILTER, SCREEN 100 MESH	1
3	605065	NIPPLE, PVC 3/4 NPT X 3”	1
4	630136	●PUMP, 24VDC	1
5	130041	WIRE TIE, NYLON 11–1/2 X .19	1
6	605064	●CAP, VINYL BLACK 1.375 DIA	1

REF	PART #	DESCRIPTION	QTY.
7	150412	FITTING, 3/8MX3/8	1
8	630439	HOSE, 2.5”	1
9	54333	CLAMP, HOSE	4
10	210044	●VALVE, CHECK 3/8 X 3/8	1
11	607102	TUBING, 5/8ODX3/8IDX2.5FT	1

● RECOMMENDED STOCK ITEMS

WAND SOLUTION GROUP

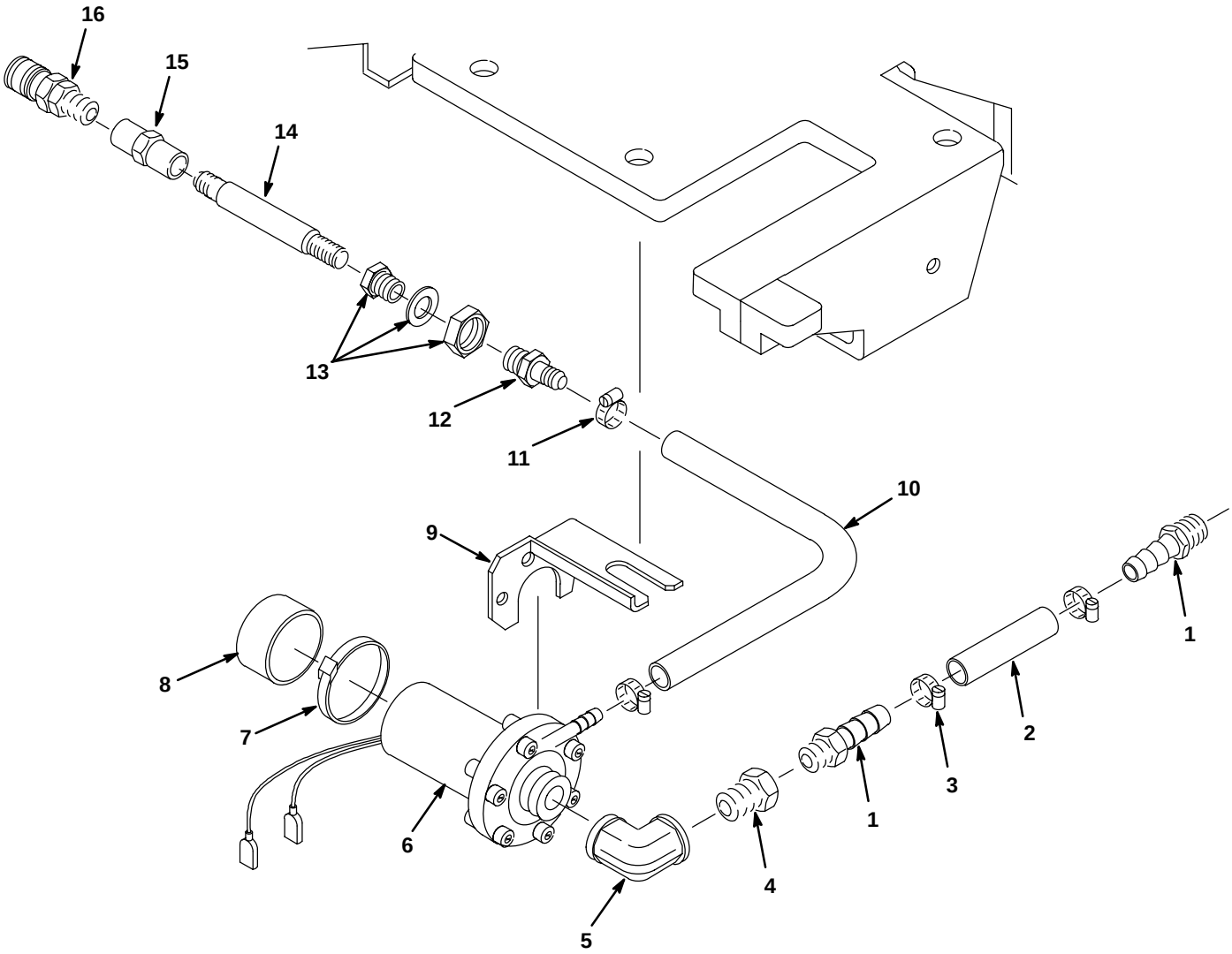

REF	PART #	DESCRIPTION	QTY.
1	150538	FITTING, 3/8MX3/8H	2
2	606363	HOSE, 3/8ID X 13”	1
3	54333	CLAMP, HOSE	2
4	630252	FITTING, 3/4MX3/8	1
5	630251	FITTING, ELBOW, 90	1
6	630136	●PUMP, WAND 24VDC	1
7	130041	WIRE TIE, NYLON 11–1/2 X .19	1
8	605064	●CAP, VINYL BLACK 1.375 DIA	1

REF	PART #	DESCRIPTION	QTY.
9	606104	BRACKET, WAND PUMP	1
10	607103	TUBING, 5/8ODX3/8IDX1.25FT	1
11	54333	CLAMP, HOSE	2
12	150516	FITTING, 1/4MX3/8	1
13	150300	CONNECTOR, ANCHOR 1/4	1
14	579214	NIPPLE, .25 X 2.5” BRASS	1
15	150302	FITTING, 1/4FX1/4F, COUPLNG	1
16	608292	QUICK CONN, FEMALE, 3/8”X1/4”	1

● RECOMMENDED STOCK ITEMS

HARD FLOOR WAND ASSEMBLY

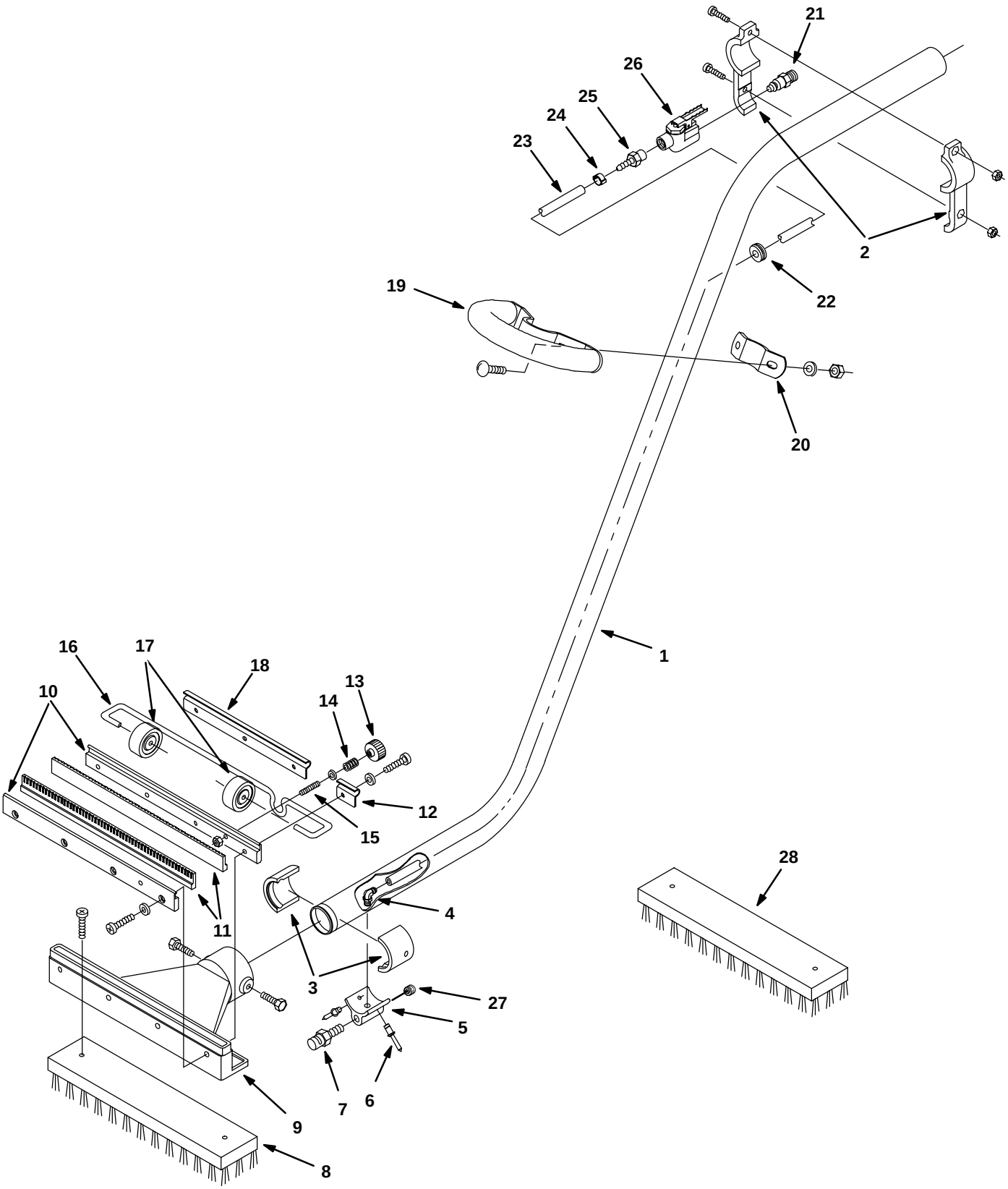

HARD FLOOR WAND ASSEMBLY

REF	PART #	DESCRIPTION	QTY.
∇	65340	ASSEMBLY, WAND, DOUBLE BEND	1
▲ 1	578060000	WAND, DOUBLE BEND, DIA 38.1MM	1
▲ 2	578077000	BRACKET, VALVE MNT, WAND	1
▲ 3	578061000	ADAPTER, HEAD/WAND	2
▲ 4	578214000	FITTING, 1/8M X 1/4H ELBOW 90	1
▲ 5	579112	ADAPTER, SPRAY NOZZLE	1
▲ 6	602036000	RIVET, POP	2
▲ 7	578066000	SPRAY NOZZLE, .125” NPT, 75 DEG.	1
▲ 8	65610	BRUSH, DECK POLYPRO BLOCK	1
▲ 9	578063000	HEAD, WAND	1
▲ 10	578078000	RETAINER, SQUEEGEE WAND	2
▲ 11	578074000	BLADE, SQUEEGEE WAND	2
▲ 12	578124000	BRACKET, AXLE 1–HOLE	1
▲ 13	578439	NUT, THUMB M06 X DIA 30MM	1
▲ 14	578228000	SPRING, COMPRESSION	1

REF	PART #	DESCRIPTION	QTY.
▲ 15	578143000	SCREW, M6X1.0X40 SET	1
▲ 16	578126000	AXLE, WAND	1
▲ 17	578125000	WHEEL, GUIDE WAND	2
▲ 18	578123000	BRACKET, AXLE 3–HOLE	1
▲ 19	578155000	HANDLE, WAND	1
▲ 20	578154000	BRACKET, HANDLE WAND	1
▲ 21	578091000	PLUG, M QUICK–CONN 1/4”NPT	1
▲ 22	578164000	GROMMET, .38”ID. .62”OD, .06”OW	1
▲ 23	578821000	HOSE, SOLUTION WAND	1
▲ 24	578161000	CLAMP, HOSE 8–11MM CRIMP	1
▲ 25	578094000	FITTING, 1/4H X 1/4NPT	1
▲ 26	578064000	VALVE, WATER CONTROL WAND	1
▲ 27	150208	PLUG, SCKT HD 1/8”	1
28	65582	BRUSH, WAND AB	1

∇ ASSEMBLY

▲ INCLUDED IN ASSEMBLY

HOSE ASSEMBLY

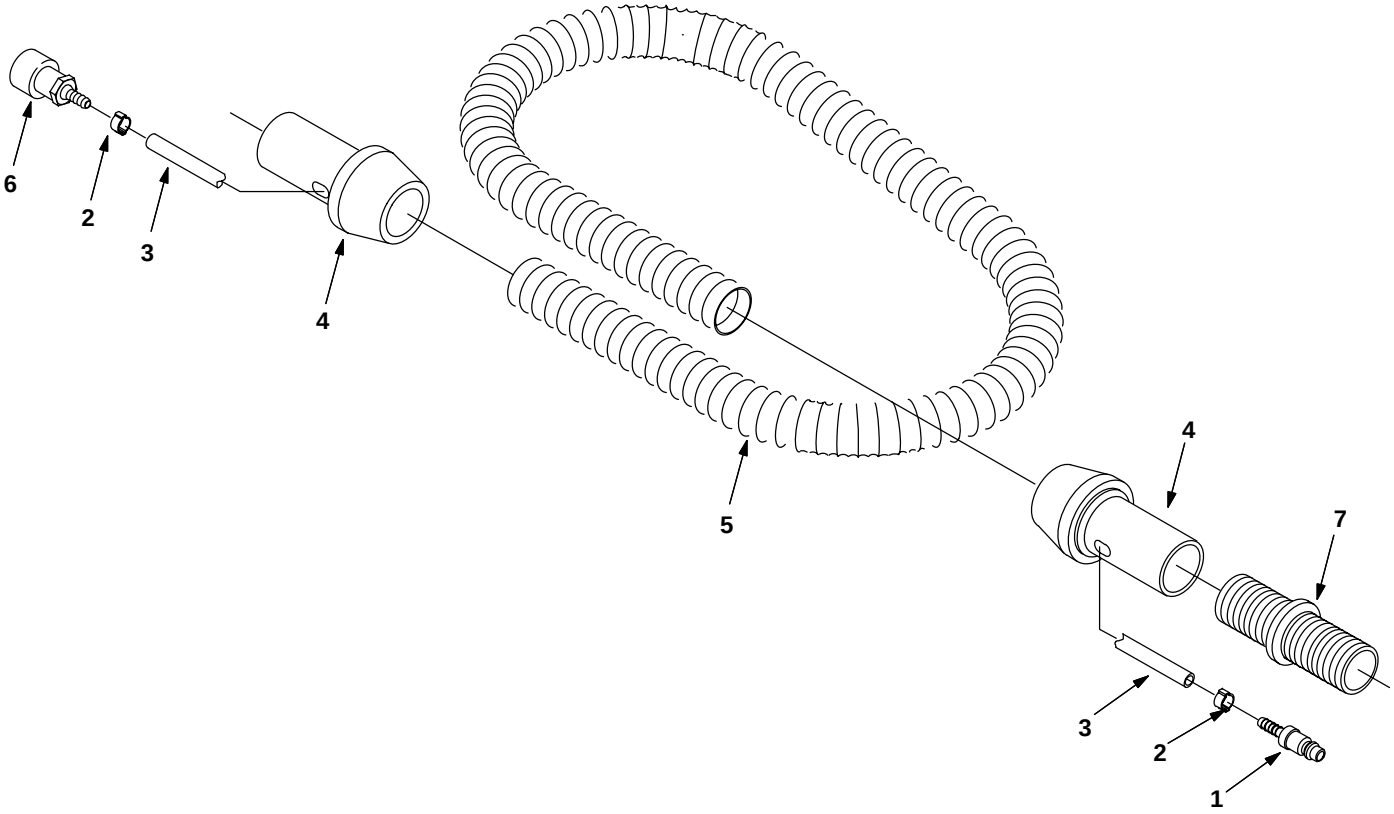

REF	PART #	DESCRIPTION	QTY.
∇	65341	ASSEMBLY, POWER WAND HOSE	1
▲ 1	578318	FITTING, QUICK CONCT MALE	1
▲ 2	578160	CLAMP, HOSE 11–13MM	1
▲ 3	578820	HOSE, .25ID, .44OD, 4.0M LG	1

∇ ASSEMBLY

▲ INCLUDED IN ASSEMBLY

REF	PART #	DESCRIPTION	QTY.
▲ 4	578072	CUFF, SWIVEL, 38.1DIA BLK	2
▲ 5	578276	HOSE, VACUUM, 38.1DX3.05M GRY	1
▲ 6	578071	CONNECTOR, QUICK CONCT F	1
7	12694	FITTING, PLASTIC	1